euro inox
The European Stainless Steel Development Association

Pedestrian Bridges in Stainless Steel

Building Series, Volume 7

Euro Inox

Euro Inox is the European market development association for stainless steel.
The members of Euro Inox include:

- European stainless steel producers
- National stainless steel development associations
- Development associations of the alloying element industries.

A prime objective of Euro Inox is to create awareness of the unique properties of stainless steels and to further their use in existing applications and in new markets. To assist this purpose, Euro Inox organises conferences and seminars, and issues guidance in printed form and electronic format, to enable architects, designers, specifiers, fabricators, and end users, to become more familiar with the material. Euro Inox also supports technical and market research.

Full Members

Acerinox,
www.acerinox.es

Outokumpu,
www.outokumpu.com

ThyssenKrupp Acciai Speciali Terni,
www.acciaiterni.com

ThyssenKrupp Nirosta,
www.nirosta.de

Ugine & ALZ Belgium
Ugine & ALZ France
Groupe Arcelor, www.ugine-alz.com

Associate Members

Acroni,
www.acroni.si

British Stainless Steel Association (BSSA),
www.bssa.org.uk

Cedinox,
www.cedinox.es

Centro Inox,
www.centroinox.it

Informationsstelle Edelstahl Rostfrei,
www.edelstahl-rostfrei.de

Informationsstelle für nichtrostende Stähle
SWISS INOX, www.swissinox.ch

Institut de Développement de l'Inox (I.D.-Inox),
www.idinox.com

International Chromium Development Association (ICDA), www.chromium-asoc.com

International Molybdenum Association (IMOA),
www.imoa.info

Nickel Institute,
www.nickelinstitute.org

Polska Unia Dystrybutorów Stali (PUDS),
www.puds.com.pl

Pedestrian Bridges in Stainless Steel
First Edition 2004 (Building Series, Vol. 7)
ISBN 2-87997-084-9
© Euro Inox 2004

Dutch version	ISBN 2-87997-103-9
Finnish version	ISBN 2-87997-104-7
French version	ISBN 2-87997-099-7
German version	ISBN 2-87997-102-0
Italian version	ISBN 2-87997-100-4
Polish version	ISBN 2-87997-106-3
Spanish version	ISBN 2-87997-101-2
Swedish version	ISBN 2-87997-105-5

Publisher
Euro Inox
Registered office:
241 route d'Arlon
1150 Luxembourg, Grand Duchy of Luxembourg
Phone +352 26 10 30 50 Fax +352 26 10 30 51
Executive office:
Diamant Building, Bd. A. Reyers 80,
1030 Brussels, Belgium
Phone +32 2 706 82 67 Fax +32 2 706 82 69
E-mail info@euro-inox.org
Internet www.euro-inox.org

Author
Martina Helzel, circa drei, Munich, Germany
(Content, Layout, Text)
Ingrid Taylor, Munich, Germany (Translation)

Cover photos:
Christopher von der Howen, London (top left),
Richard Bryant/Arcaid, Kingston upon Thames (top right),
Ramböll Sweden, Stockholm (bottom left),
Javier Azurmendi Perez, Madrid (bottom right)

Content

Girder bridge in Stockholm, Sweden	2
Helical bridge in London, England	5
Stress-ribbon bridge in the Via Mala Gorge, Switzerland	6
Arch bridge in York, England	8
Girder bridge in Chiavari, Italy	10
Arch bridge in Terni, Italy	12
Cable stayed bridge in London, England	14
Arch bridge in Andrésy, France	16
Trough bridge in Bilbao, Spain	18

Disclaimer
Euro Inox has made every effort to ensure that the information presented in this document is technically correct. However, the reader is advised that the material contained herein is for general information purposes only. Euro Inox, its members, staff, and consultants, specifically disclaim any liability or responsibility for loss, damage, or injury, resulting from the use of the information contained in this publication.

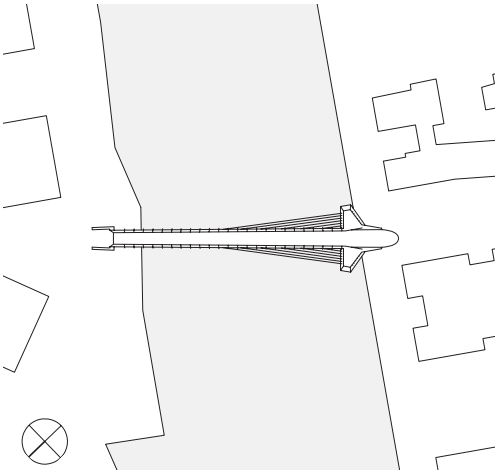

Site plan
scale 1:2000

Girder bridge in Stockholm, Sweden

Client:
City of Stockholm
Architects:
Magnus Ståhl, Erik Andersson,
Jelena Mijanovic, Stockholm
Structural engineers:
Tyréns AB, Stockholm
Scandiaconsult AB, Luleå

This bridge over the Sickla Canal in the south of Stockholm provides pedestrian and cyclist access to a new residential district. Because of the high salt content in the water flowing in from the Baltic, the bridge frame is made of high-strength duplex steel (grade: 1.4462). A single gently arched longitudinal girder, braced horizontally by stainless steel cables running down both sides, spans 62.0 m across the canal. The tension cables, fixed into sleeves welded onto the underside of the girder, fan out towards the concrete abutment like the strings of a harp. The box girder, too, reaches its widest cross section

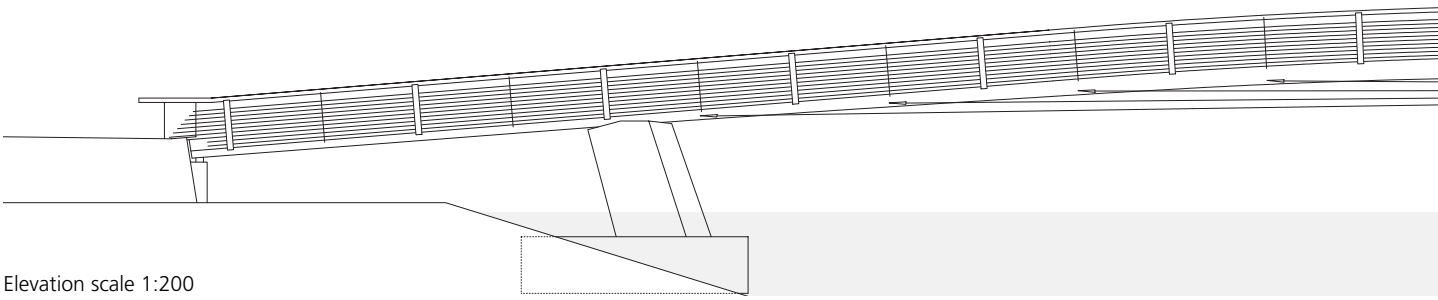

Elevation scale 1:200

The lighting is integrated inside the inward-sloping handrail standards of stainless steel.

at the abutment. Lighting for the bridge is integrated between the handrail standards, which are made of two plates of stainless steel.

The bridge was prefabricated in three parts in a shipyard. Plates of hot-rolled stainless steel, 25 mm thick, were cut with a water jet and bent to shape, then welded together to form a box girder of triangular cross section with longitudinal and cross ribs inside. Once the individual sections had been put together, the surfaces were sandblasted and the construction positioned on the bearing points using a floating crane.

Photos: Peter Stockenberg/SBI, Stockholm

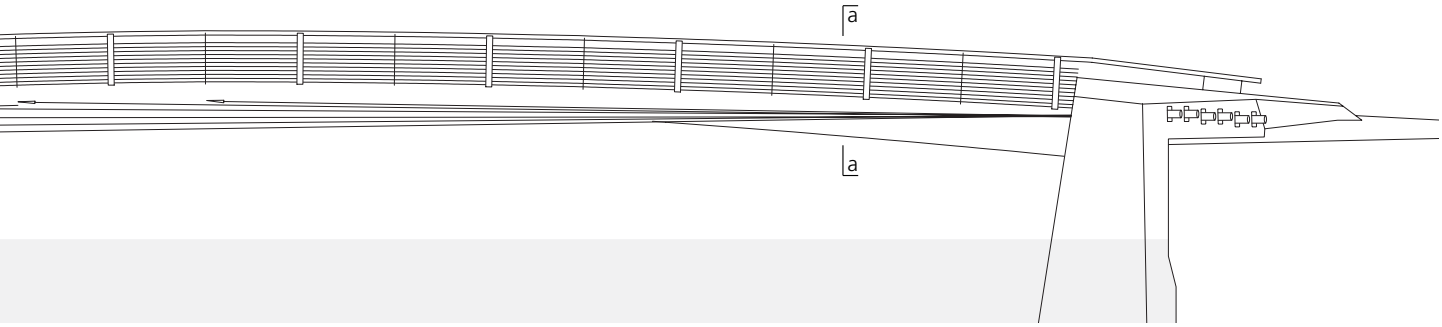

The triangular cross-section longitudinal girder is made from individual plates of stainless steel welded together.

The higher material costs involved in choosing stainless steel as compared to conventional structural steel are more than compensated by a considerably longer life span and lower maintenance and repainting costs. This bridge in Stockholm has already won a number of national and international awards.

The girder support for the bridge was fully prefabricated in three sections in a shipyard.

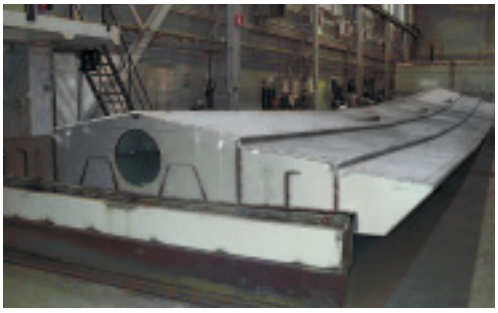

Photos:
STÅLAB, Trollhättan

Section scale 1:100
1 Box girder
25 mm stainless steel plate
grade 1.4462
2 Round steel bar, 90 mm dia.
3 Concrete abutment
4 Bridge covering, 50 mm asphalt
5 Handrail, 114.3 mm dia. stainless steel tube, grade 1.4462
6 Handrail standard
2 x 10 mm stainless steel plate
grade 1.4462
with integrated lighting
7 Balustrade infill
30 mm dia. stainless steel tube
grade 1.4462

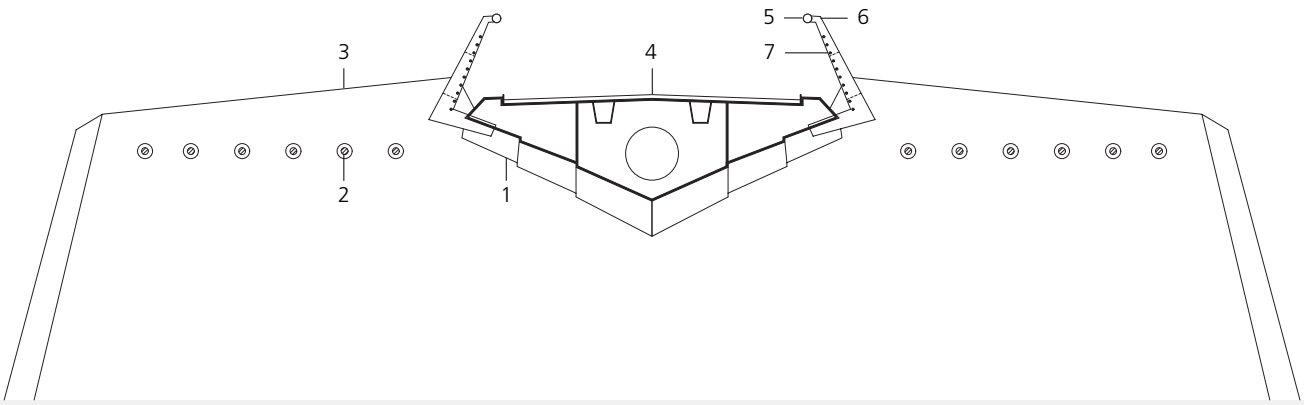

aa

Helical bridge in London, England

Client:
Paddington Development Corp., London
Design:
Marcus Taylor (sculptor)
Structural engineers:
Happold Mace, London

The unusual support structure for this covered footbridge is made entirely of stainless steel. Steel tube, bent into a spiral shape, is braced by six square-section transoms welded along its length. These transoms also serve as fixing points for the curved glass panes on the inside of the tube. Measuring 7.0 m in length and 3.5 m in diameter the walkway spans a narrow canal in a new business district in central London.
In order to keep the canal open to water traffic, the bridge is designed to retract. The deck is therefore mounted on a motor-driven trolley chassis that moves linearly on four concealed rails. As the bridge moves, the stainless steel spiral also starts a rotary movement that gives the impression the bridge is being corkscrewed into or out of the opposite bank. When in place the nose end of the structure locks into a ramp on the other side. In total the opening or closing procedure takes 160 seconds.

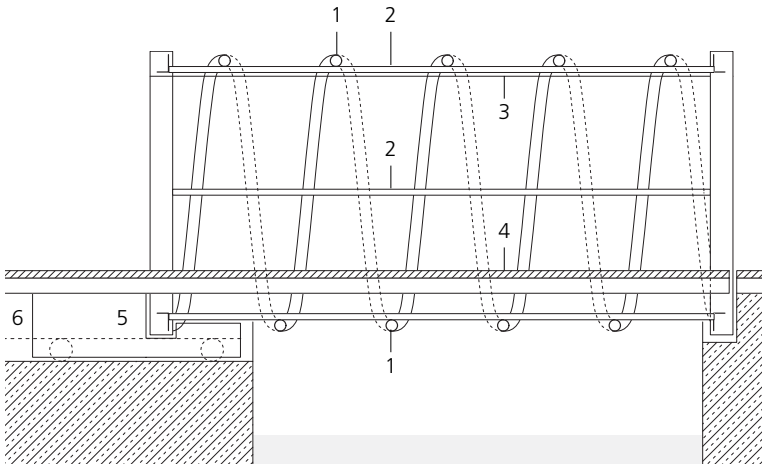

Section scale 1:100
1 Spiral, 140 mm dia./6 mm stainless steel tube grade 1.4401
2 Longitudinal girder 80/80/6 mm square-section stainless steel grade 1.4401
3 15 mm laminated safety glass
4 Bridge deck
5 Motor-driven trolley chassis
6 Rails

The stainless steel structure and the curved panes of glass form a single stiff tube over the canal.

Photo: Christopher von der Howen, London

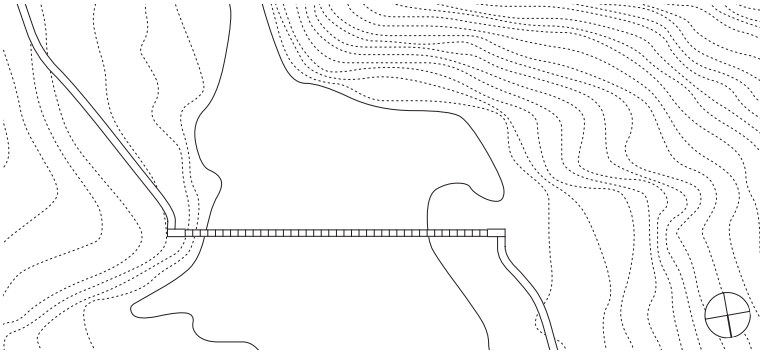

Site plan
scale 1:1000

Stress-ribbon bridge in the Via Mala Gorge, Switzerland

Client:
Verein KulturRaum Via Mala, Chur
Architects + structural engineers:
Conzett, Bronzini, Gartmann AG, Chur

In the process of extending an existing walking trail through the Via Mala, a new path was laid down in the southern part of the gorge, spanning the Hinterrhein river, just north of a road bridge. A broadening of the river downstream from Suransuns offered easy terrain for the trail on both banks. However, at this point the span to be bridged is relatively wide, at 40 m. The stress-ribbon system copes with the difference in height between the two banks, and offers a good cross section.
Spray laden with de-icing salt from a nearby main road posed a potential problem, so all the steel components of the bridge were made of highly alloyed stainless steel with good corrosion-resistance. The stressed ribbons are made of duplex stainless steel which also has excellent strength properties. The two pairs of stressed ribbons are statically well positioned in the neutral axis of the overall cross section.

Four slender stressed ribbons of stainless steel and a walkway of natural stone slabs continue the path across the 40 m ravine.

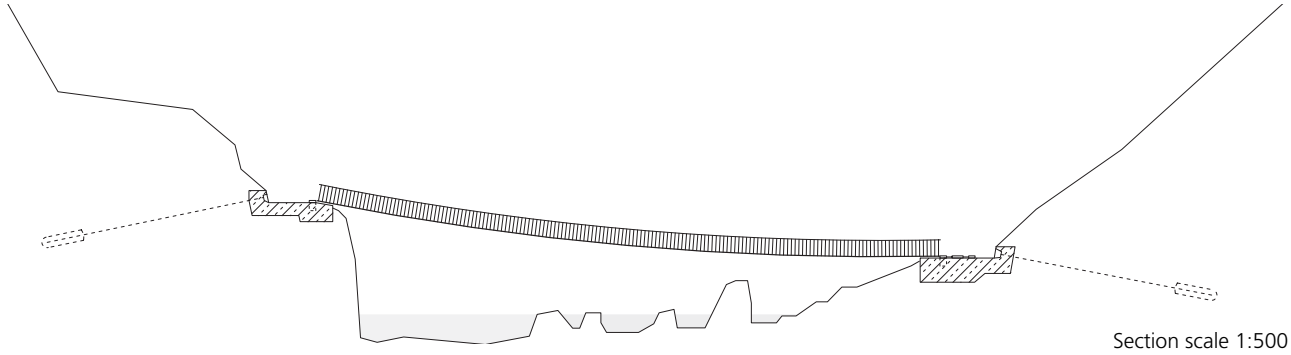

Section scale 1:500

The bracing to hold the ends of the stressed ribbons is cast in the two solid concrete abutments. Once the ribbons were fixed in place, the stone slabs for the walkway were laid, starting at the lower of the two bearing points. The slabs and the handrail standards were bolted to the stainless steel ribbons. Post-tensioning of the stainless steel ribbons then wedged the stone slabs so tightly to the aluminium levelling courses lying in the joints that they act like a monolithic slab. After the nuts were finally tightened on the handrail standards, the handrail was welded to the upper end of these posts.

Photos:
Alexander Felix, Munich

Section and elevation
scale 1:20
1 15/60 mm stressed ribbon grade 1.4462
2 Andeer Gneis slabs 1100/250/60 mm
3 Handrail standard 16 mm dia. grade 1.4435
4 Handrail 10/40 mm steel flat grade 1.4435
5 Joint insert 3/60/1100 mm aluminium

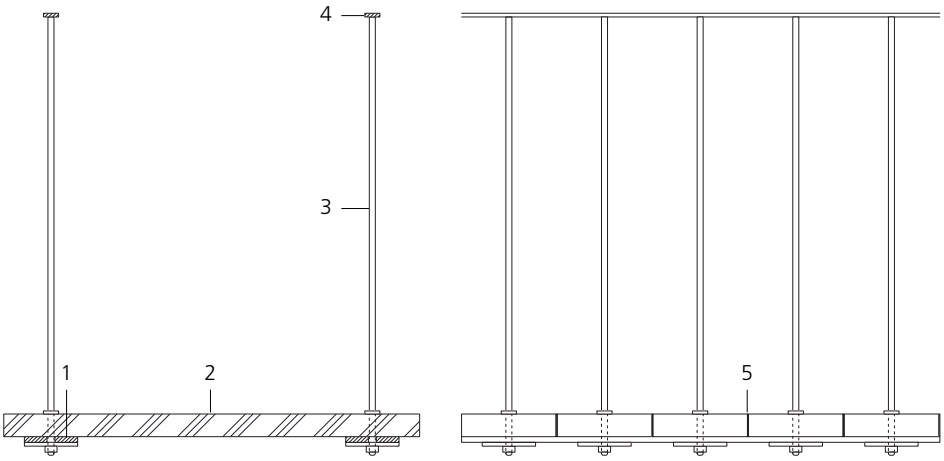

Arch bridge in York, England

Client:
York Millennium Bridge Trust, York
Architects + structural engineers:
Whitby Bird & Partners, London

This bridge over the River Ouse at York is not only a crossing place for pedestrians and cyclists, it also opens up the river as a recreational space for the local inhabitants. An arch of stainless steel, tilted 50° from the vertical, spans 80 metres, its slender bridge deck suspended from a radial arrangement of stainless steel cables. As with the spokes of a bicycle wheel, these slender cables have a mutually stabilising effect. The polygonal cross section of the bridge deck, which is made of welded steel plate, takes the bending and tensile loads.

To keep sufficient clear height for water traffic passing underneath, the requisite static height of the box girder was designed in cross section as a step. Across the entire width of the bridge this step also serves as a bench; the suspension cables are attached to its front and back edges.

Site plan
scale 1:1000

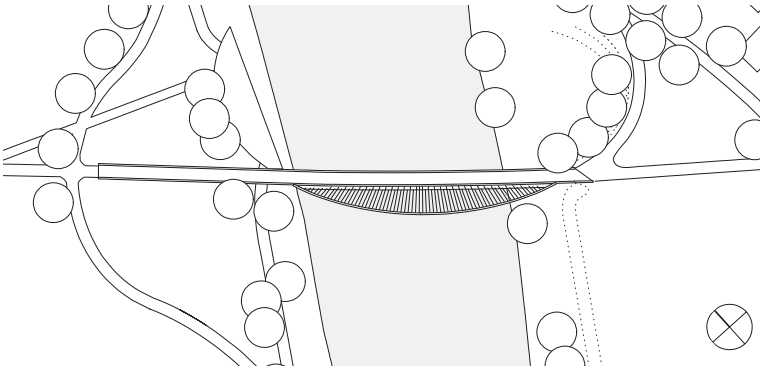

The stainless steel arch, spanning 80 m across the river, is tilted at 50° to the vertical.

Photos: Richard Bryant/Arcaid, Kingston upon Thames

The stainless steel suspension cables join the arch to the box girder like the spokes in a bicycle wheel.

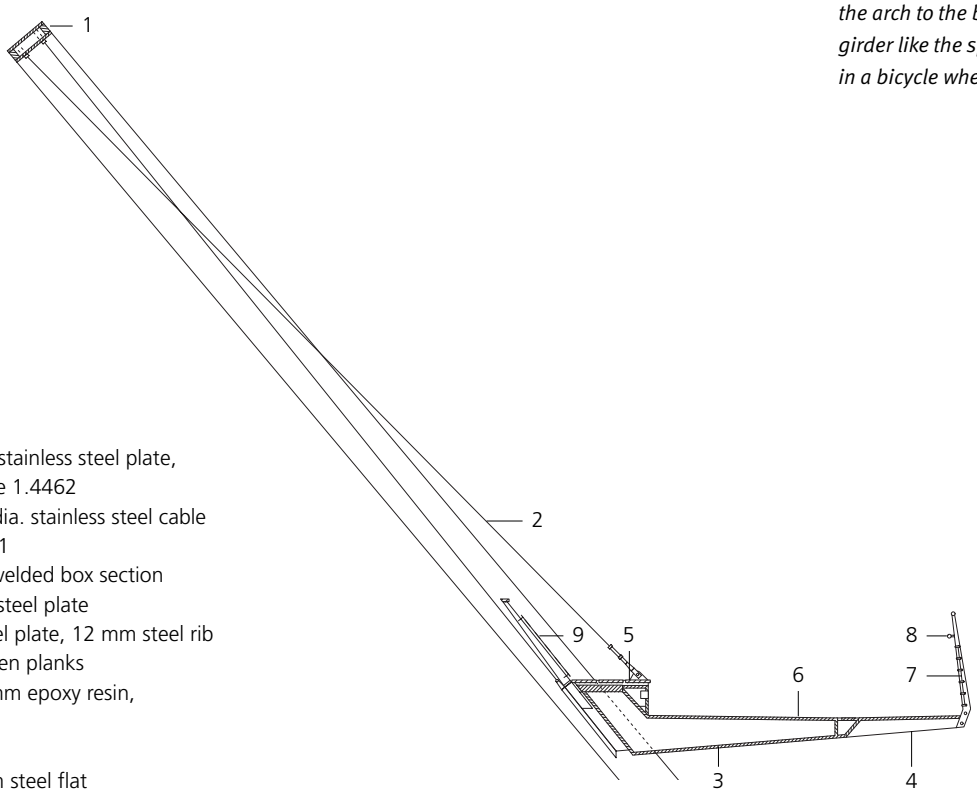

Section scale 1:100

1 Arch,
600/200 mm duplex stainless steel plate,
20 and 80 mm, grade 1.4462
2 Suspension, 19 mm dia. stainless steel cable
material grade 1.4401
3 Longitudinal girder, welded box section
10, 15, 75, 125 mm steel plate
4 Cantilever, 8 mm steel plate, 12 mm steel rib
5 Bench, 40 mm wooden planks
6 Travelled surface, 6 mm epoxy resin,
non-slip coating
7 Balustrade
standard, 170/20 mm steel flat
infill, 50/10 mm steel flat
8 Handrail and top of balustrade
48.3 mm dia. stainless steel tube,
grade 1.4401
9 Stainless steel mesh, grade 1.4401

Girder bridge in Chiavari, Italy

Client:
Comune di Chiavari
Architects + structural engineers:
Studio Tecnico Associato
Sergio Picchio, Genoa

This footbridge was built as part of an urban regeneration programme in Chiavari, a small town near Genoa. It spans an existing access road to the yacht harbour and creates a continuous waterside promenade. The entire bridge frame is made of stainless steel (grade: 1.4401). Welded rolled steel girders, in the longitudinal direction, are bolted to cross beams at 1.6 m spacing. A grid of round bars provides horizontal bracing.

The bridge deck is attached to two H-shaped trestles via a sliding bearing. The handrail standards and the welded horizontal infill are also made of stainless steel tube. Because of the outstanding mechanical properties of the material, it was possible to use thinner cross sections than with conventional structural steel for the same load-bearing capacity. The high corrosion resistance of the material gives the structure a long life span and reduces maintenance input, even in this coastal environment. As part of the same project, the street furniture along the waterfront was also replaced and stainless steel street lamps and benches installed.

The stainless steel footbridge spans the approach road to the yacht harbour.

Stainless steel balustrades and teak decking add a distinctive touch to the new waterfront promenade.

Photos:
Sergio Picchio, Genoa

H-shaped trestles support the deck and shorten the span width of the bridge.

Plan scale 1:100

1 Longitudinal girder, welded stainless steel, grade 1.4401
300/20 mm flange, 318/8 mm web
2 Cross beam, welded stainless steel, grade 1.4401
70/6 mm flange, 126/5 mm web
3 Butt strap, 20 mm stainless steel, grade 1.4401
4 Cross bracing, 20 mm dia. stainless steel bar grade 1.4401
5 Boom/sole plate 460 mm dia.
6 Column, 280 mm dia./15 mm CHS
7 Concrete foundations
8 Balustrade, stainless steel tube
9 Timber decking, teak, profiled surface

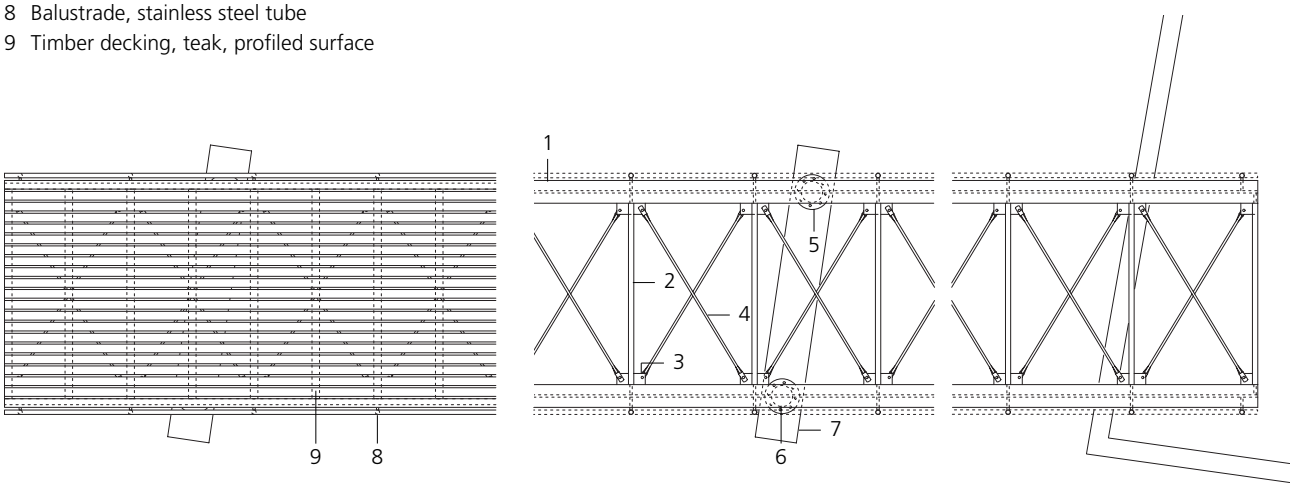

Arch bridge in Terni, Italy

Client:
Comune di Terni
Architect + structural engineer:
Fabrizio Granaroli, Terni

This pedestrian and cycle bridge crosses the River Nera, linking the densely populated old town of Terni with the outer urban districts. The two steel arches, 7 m high, tilt towards each other and span a distance of over 32 m. The bridge deck is 5.25 m wide, the central portion being reserved for pedestrians, while the two cycle paths run outside the suspension points. The components of the bridge subject to most public use and statical loading – with the exception of the arches and the trapezoid sheet – are made of stainless steel (grade: 1.4401). Over the life span of the bridge the initially higher material costs are compensated by lower maintenance costs.

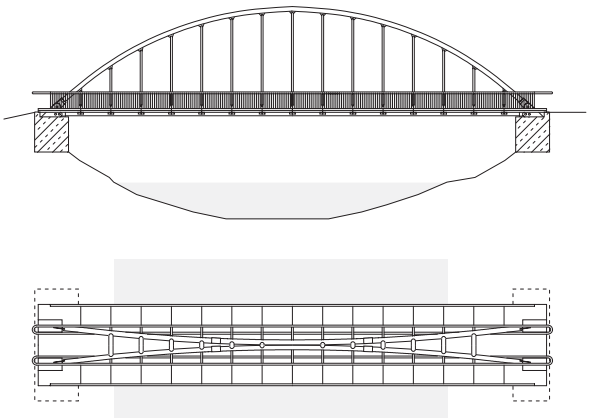

Elevation · Ground plan
scale 1:500

Stainless steel is used for the bridge components subject most to public use and statical loading.

The stainless steel suspension cables also separate the pedestrian and cycle paths.

Photos: Fabrizio Granaroli, Terni

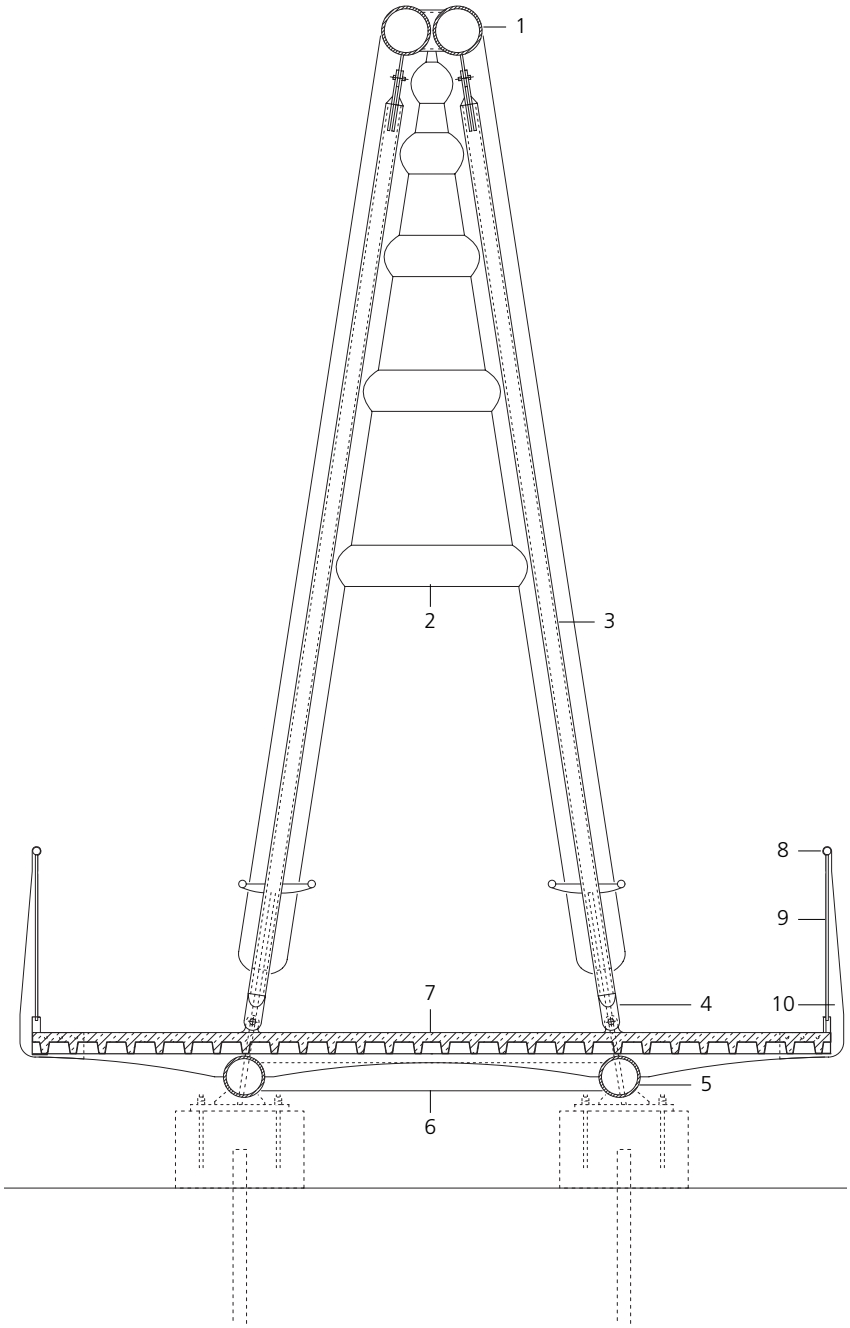

Section scale 1:50

1 Arch, 323.9 mm dia./7.1 mm CHS
2 Cross bracing, 273 mm dia./5.6 mm
3 Tie rod, 114.3 mm dia./3.2 mm stainless steel grade 1.4404
4 15 mm stainless steel strut
5 Longitudinal member, 273 mm dia./5.6 mm stainless steel tube
6 Transverse member, 168.3 mm dia./4 mm tubular steel
7 Bridge deck, 140 mm reinforced concrete
55 mm trapezoid sheet
15 mm stainless steel cross ribs, a=2000 mm
8 mm steel plate
8 Handrail
51 mm dia./2.6 mm stainless steel tube
9 Railing post, 25 mm dia./2 mm stainless steel tube
10 Handrail standard, 20 mm stainless steel

Cable stayed bridge in London, England

Client:
London Docklands Development Corporation
Architects:
Nicholas Lacey & Partners, London
Structural engineers:
Whitby Bird & Partners, London

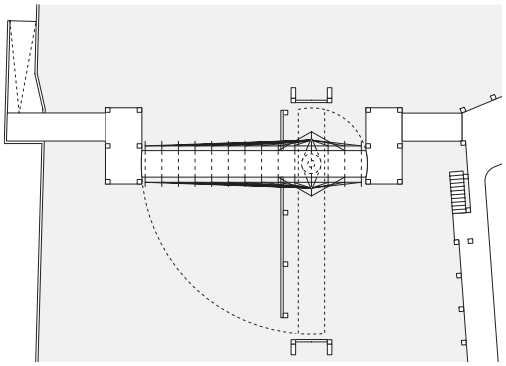

Site plan scale 1:500

The bridge at St Saviour´s Dock in London closes a gap in the footpath along the south bank of the Thames. Close by are old warehouses that have been converted into apartments. A distinctive feature of the bridge is its tension system, an arrangement of cables echoing the old hoists still attached to the façades of the buildings. The bridge rotates around a restrained support column attached to the floor of the waterway. Two pylons affixed to the sides of the column carry the bridge deck via a system of slender cables. The attraction of stainless steel here is its high load-bearing capacity, low material cross-section and a high degree of protection against vandalism.

Photos: Christopher von der Howen, London

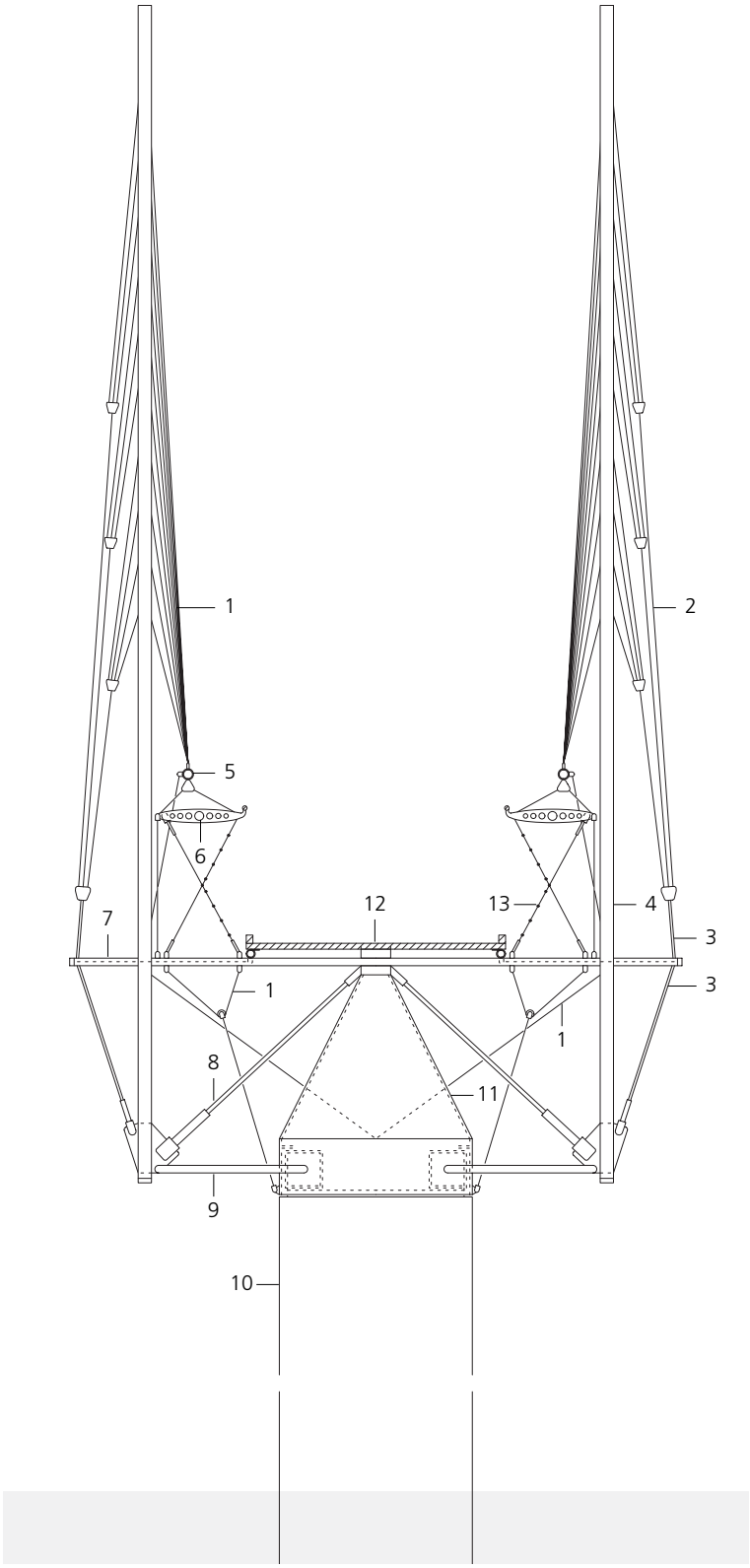

A fan-shaped arrangement of tie rods supports the rotating footbridge.

Section scale 1:100

1 Tension rod, 6.35 mm dia. stainless steel
2 Tension rod, 10.3 mm dia. stainless steel
3 Tension rod, 12.7 mm dia. stainless steel
4 Column, 88.9 mm dia./12.7 mm stainless steel
5 Longitudinal girder, 73.7 mm dia./7 mm
6 Twin struts, 2 x 6 mm perforated stainless steel
7 Cross beam, 50.8 mm dia./6.35 mm stainless steel
8 Diagonal tension rod, 26 mm dia.
9 Strut, 50.8 mm dia./6.35 mm stainless steel
10 Reinforced concrete column, 1300 mm dia.
11 Rotating cone
12 Timber deck, 60.3 mm dia./7.1 mm bottom chord welded fixing straps
13 Balustrade, 8 mm dia. stainless steel bar horizontal infill, 4 mm dia. bar

Arch bridge in Andrésy, France

Client:
Ville d'Andrésy (Yvelines)
Architects:
Bruno J. Hubert & Michel Roy architectes, Paris
Structural engineers:
Group ALTO, Marc Malinowsky, Gentilly

West of Paris, in Andrésy, this footbridge connects a school to sports facilities on the other side of a 33 m wide busy main road. A triangular-section stainless steel arch with a matt surface finish stands vertically above the carriageway. Tie rods from this arch support the bridge deck below which curves in both plan and elevation. The walkway itself, 2.5 m wide and made of stainless steel, was assembled from four identical prefabricated sections. Horizontal stability for the structure comes from the interplay between the arch and the bridge deck. Stainless steel was also chosen for the handrails and the balustrades, while a non-slip timber flooring was used on the walkway.

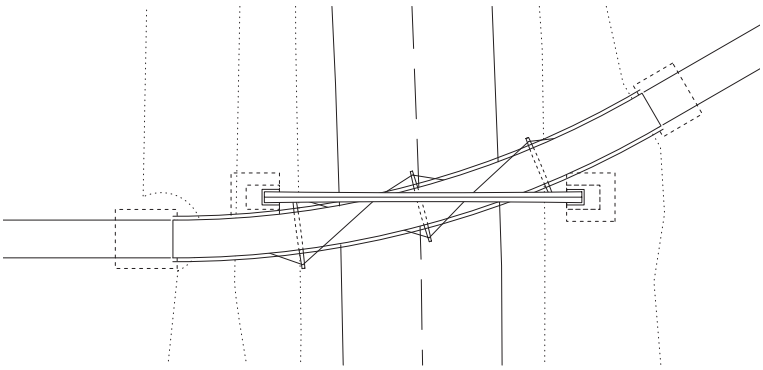

Site plan scale 1:500

Photos: Bruno J. Hubert & Michel Roy architectes, Paris

The bridge deck curves underneath the stainless steel arch over a busy road.

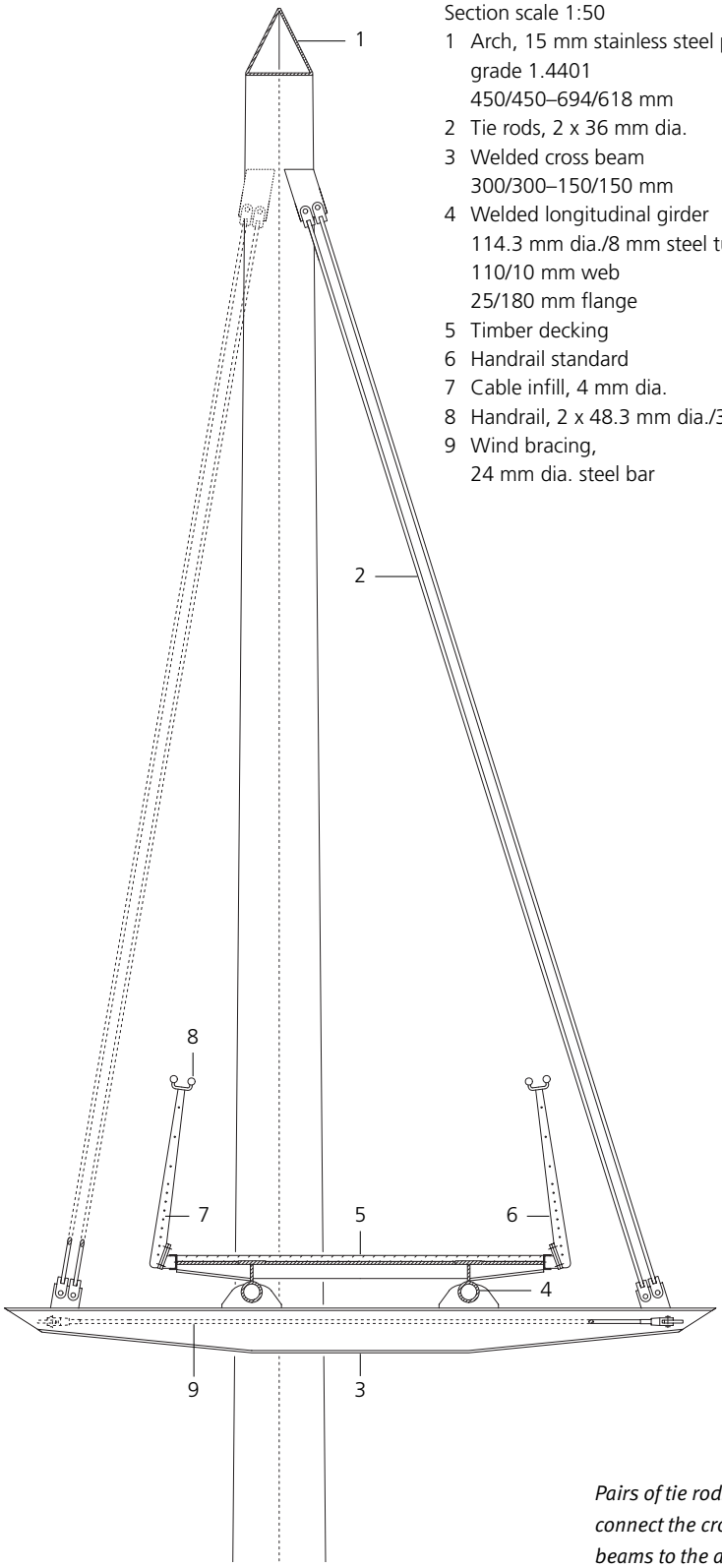

Section scale 1:50

1 Arch, 15 mm stainless steel plate, grade 1.4401
450/450–694/618 mm
2 Tie rods, 2 x 36 mm dia.
3 Welded cross beam
300/300–150/150 mm
4 Welded longitudinal girder
114.3 mm dia./8 mm steel tube
110/10 mm web
25/180 mm flange
5 Timber decking
6 Handrail standard
7 Cable infill, 4 mm dia.
8 Handrail, 2 x 48.3 mm dia./3 mm
9 Wind bracing,
24 mm dia. steel bar

The triangular cross section of the arch tapers from the foundations up to the apex.

Pairs of tie rods connect the cross beams to the arch.

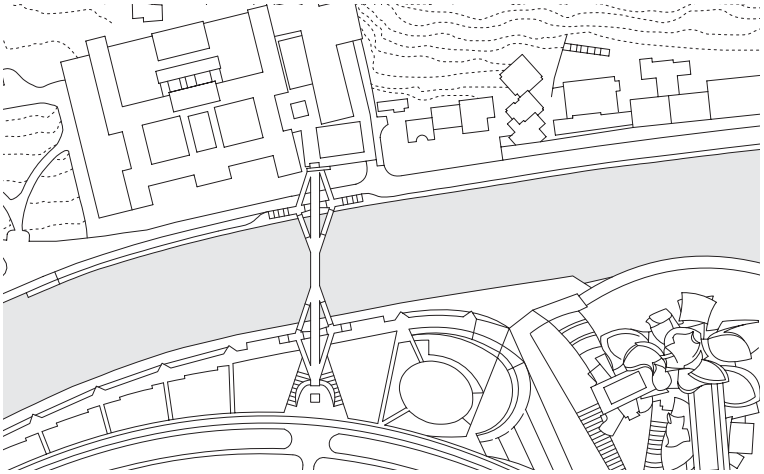

Site plan
scale 1:5000

Trough bridge in Bilbao, Spain

Client:
Bilbao Ría 2000, Bilbao
Architect:
Lorenzo Fernández Ordóñez, Bilbao
Structural engineers:
IDEAM S.A., Madrid
José A. F. Ordóñez, Francisco M. Mato, Javier P. Santos, Tomás R. Alonso

Within sight of the Guggenheim Museum in Bilbao, this distinctive footbridge spans the River Nervión, linking Deusto University with the district of Abandoibarra on the other side. The support structure for the bridge is of duplex stainless steel, grade 1.4362, which is notable for its high strength. In addition, the corrosion resistance of the material ensures a life span of over 50 years for the bridge, in the salt-laden air of the Bay of Biscay.

The footbridge forms a distinctive link between the university and the Guggenheim Museum.

The U-shaped trough, which is 1.9 m high and up to 7.6 m wide, is made up of 20 mm stainless steel plate. On the underside, reinforcing ribs of steel are welded at 3.0 m spacing to provide cross bracing. Welded box beams on the upper and lower edges brace the bridge in a longitudinal direction. All internal surfaces of the structure have a double coating to prevent possible corrosion at the points of contact between the two different types of steel.

Photos: Javier Azurmendi Perez, Madrid

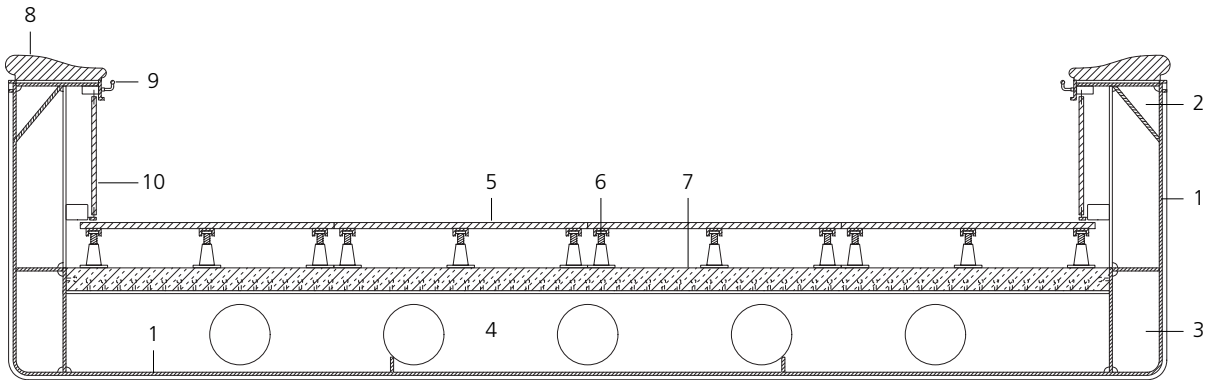

Section scale 1:20

1 20 mm stainless steel plate, grade 1.4362 4100–7600/1950 mm
2 Box girder, top
3 Box girder, bottom
4 Perforated web steel girder
5 Lapacho timber planks
6 Height-adjustable stilted bearer
7 Composite steel-and-concrete slab
8 Lapacho cladding on top of balustrade
9 Stainless steel handrail
10 Lapacho cladding on sides of balustrade

The broad bridge trough of stainless steel is clad on the inside with Lapacho timber.

The 142.2 m bridge is made up of many individual sections, evident in the visible joints. The trough itself is divided into three spans, and at each end access to the bridge is via four ramps, which also shore up the structure. The opposed ramps form stable trestles, thus enabling the bridge to span unsupported across 80 m. The inner surfaces of the trough and the upper side of the balustrade are clad entirely with timber, thus giving a more solid impression.

At night, the bridge is impressively lit.

euro inox
The European Stainless Steel Development Association

ISBN 2-87997-084-9

Diamant Building · Bd. A. Reyers 80 · 1030 Brussels · Belgium · Phone +32 2 706 82 -67 · Fax -69 · e-mail info@euro-inox.org · www.euro-inox.org