940.01 General
940.02 References
940.03 Definitions
940.04 Interchange Design
940.05 Ramps
940.06 Interchange Connections
940.07 Ramp Terminal Intersections at Crossroads
940.08 Interchanges on Two-Lane Highways
940.09 Interchange Plans
940.10 Documentation

940.01 General

The primary purpose of an interchange is to eliminate conflicts caused by vehicle crossings and to minimize conflicting left-turn movements. Interchanges are provided on all Interstate highways, freeways, other routes on which full access control is required, and at other locations where traffic cannot be controlled safely and efficiently by intersections at grade.

See the following chapters for additional information:

Chapter	Subject
640	Ramp Sections
641	Turning Widths
642	Superelevation
910	Intersections
1050	HOV Lanes
1055	HOV Direct Access Connections
1420	Access Control
1425	Interchange Justification Report
1430	Limited Access

940.02 References

Standard Plans for Road, Bridge, and Municipal Construction (Standard Plans), M 21-01, WSDOT

Plans Preparation Manual, M 22-31, WSDOT

Standard Specifications for Road, Bridge, and Municipal Construction (Standard Specifications), M 41-10, WSDOT

A Policy on Geometric Design of Highways and Streets (Green Book), 2001, AASHTO

A Policy on Design Standards - Interstate System, 1991, AASHTO

Highway Capacity Manual (Special Report 209), Transportation Research Board

Procedure for Analysis and Design of Weaving Sections, A User's Guide, October 1985, Jack E. Leisch

940.03 Definitions

auxiliary lane The portion of the roadway adjoining the traveled way for parking, speed change, turning, storage for turning, weaving, truck climbing, passing, and other purposes supplementary to through traffic movement

basic number of lanes The minimum number of general purpose lanes designated and maintained over a significant length of highway.

collector distributor road (C-D road) A parallel roadway designed to remove weaving from the main line and to reduce the number of main line entrances and exits.

decision sight distance The sight distance required for a driver to detect an unexpected or difficult-to-perceive information source or hazard, interpret the information, recognize the hazard, select an appropriate maneuver, and complete it safely and efficiently.

frontage road An auxiliary road that is a local road or street located on the side of a highway for service to abutting properties and adjacent areas, and for control of access.

gore The area downstream from the intersection of the shoulders of the main line and exit ramp. Although generally the area between a main line and an exit ramp, the term may also be used to refer to the area between a main line and an entrance ramp.

intersection at grade The general area where a state highway or ramp terminal is met or crossed at a common grade or elevation by another state highway, a county road, or a city street.

Interstate System A network of routes selected by the state and the FHWA under terms of the federal aid acts as being the most important to the development of a national transportation system. The Interstate System is part of the principal arterial system.

lane A strip of roadway used for a single line of vehicles.

median The portion of a divided highway separating the traveled ways for traffic in opposite directions.

outer separation The area between the outside edge of traveled way for through traffic and the nearest edge of traveled way of a frontage road.

painted nose The point where the main line and ramp lanes separate.

physical nose The point, upstream of the gore, with a separation between the roadways of 16 to 22 ft. See Figures 940-11a and 11b.

ramp A short roadway connecting a main lane of a freeway with another facility for vehicular use such as a local road or another freeway.

ramp connection The pavement at the end of a ramp, connecting it to a main lane of a freeway.

ramp meter A traffic signal at a freeway entrance ramp that allows a measured or regulated amount of traffic to enter the freeway.

ramp terminal The end of a ramp at a local road.

roadway The portion of a highway, including shoulders, for vehicular use. A divided highway has two or more roadways.

sight distance The length of highway visible to the driver.

shoulder The portion of the roadway contiguous with the traveled way, primarily for accommodation of stopped vehicles, emergency use, lateral support of the traveled way, and (where permitted) use by bicyclists and pedestrians.

stopping sight distance The sight distance required to detect a hazard and safely stop a vehicle traveling at design speed.

traffic interchange A system of interconnecting roadways, in conjunction with one or more grade separations, providing for the exchange of traffic between two or more intersecting highways or roadways.

traveled way The portion of the roadway intended for the movement of vehicles, exclusive of shoulders and lanes for parking, turning, and storage for turning.

940.04 Interchange Design

(1) General

All freeway exits and entrances, except HOV direct access connections, are to connect on the right of through traffic. Deviations from this requirement will be considered only for special conditions.

HOV direct access connections may be constructed on the left of through traffic when they are designed in accordance with Chapter 1055.

Provide complete ramp facilities for all directions of travel wherever possible. However, give primary consideration to the basic traffic movement function that the interchange is to fulfill.

Few complications will be encountered in the design and location of rural interchanges that simply provide a means of exchanging traffic between a limited access freeway and a local crossroad. The economic and operational effects of locating traffic interchanges along a freeway through a community requires more careful consideration, particularly with respect to local access, to provide the best local service possible without reducing the capacity of the major route or routes.

Where freeway to freeway interchanges are involved, do not provide ramps for local access unless they can be added conveniently and without detriment to safety or reduction of ramp and through-roadway capacity. When exchange of traffic between freeways is the basic function and local access is prohibited by access control restrictions or traffic volume, it may be necessary to provide separate interchanges for local service.

(2) Interchange Patterns

Basic interchange patterns have been established that can be used under certain general conditions and modified or combined to apply to many more. Alternatives must be considered in the design of a specific facility, but the conditions in the area and on the highway involved must govern and rigid patterns must not be indiscriminately imposed.

Selection of the final design must be based on a study of projected traffic volumes, site conditions, geometric controls, criteria for intersecting legs and turning roadways, driver expectancy, consistent ramp patterns, continuity, and cost.

The patterns most frequently used for interchange design are those commonly described as directional, semidirectional, cloverleaf, partial cloverleaf, diamond, and single point (urban) interchange. (See Figure 940-4.)

(a) **Directional** A directional interchange is the most effective design for connection of intersecting freeways. The directional pattern has the advantage of reduced travel distance, increased speed of operation, and higher capacity. These designs eliminate weaving and have a further advantage over cloverleaf designs in avoiding the loss of sense of direction drivers experience in traveling a loop. This type of interchange is costly to construct, commonly using a four-level structure.

(b) **Semidirectional** A semidirectional interchange has ramps that loop around the intersection of the highways. This requires multiple single-level structures and more area than the directional interchange.

(c) **Cloverleaf** The full cloverleaf interchange has four loop ramps that eliminate all the left-turn conflicts. Outer ramps provide for the right turns. A full cloverleaf is the minimum type interchange that will suffice for a freeway-to-freeway interchange. Cloverleaf designs often incorporate a C-D road to minimize signing difficulties and to remove weaving conflicts from the main roadway.

The principal advantage of this design is the elimination of all left-turn conflicts with one single-level structure. Because all movements are merging movements, it is adaptable to any grade line arrangement.

The cloverleaf has some major disadvantages. The left-turn movement has a circuitous route on the loop ramp, the speeds are low on the loop ramp, and there are weaving conflicts between the loop ramps. The cloverleaf also requires a large area. The weaving and the radius of the loop ramps are a capacity constraint on the left-turn movements.

(d) **Partial Cloverleaf (PARCLO)** A partial cloverleaf has loop ramps in one, two, or three quadrants that are used to eliminate the major left-turn conflicts. These loops may also serve right turns for interchanges that have one or two quadrants that must remain undeveloped. Outer ramps are provided for the remaining turns. Design the grades to provide sight distance between vehicles approaching these ramps.

(e) **Diamond** A diamond interchange has four ramps that are essentially parallel to the major arterial. Each ramp provides for one right and one left-turn movement. Because left-turns are made at grade across conflicting traffic on the crossroad, intersection sight distance is a primary consideration.

The diamond design is the most generally applicable and serviceable interchange configuration and usually requires less space than any other type. Consider this design first when a semidirectional interchange is required unless another design is clearly dictated by traffic, topography, or special conditions.

(f) **Single Point (Urban)** A single point urban interchange is a modified diamond with all of its ramp terminals on the crossroad combined into one signalized at-grade intersection. This single intersection accommodates all interchange and through movements.

A single point urban interchange can improve the traffic operation on the crossroad with less right of way than a typical diamond interchange; however, a larger structure is required.

(3) Spacing

To avoid excessive interruption of main line traffic, consider each proposed facility in conjunction with adjacent interchanges, intersections, and other points of access along the route as a whole.

The minimum spacing between adjacent interchanges is 1 mi in urban areas and 2 mi in rural areas. In urban areas, spacing less than 1 mi may be used with C-D roads or grade separated (braided) ramps. Generally, the average interchange spacing is not less than 2 mi in urban areas and not less than 4 mi in suburban areas. Interchange spacing is measured along the freeway center line between the center lines of the crossroads.

The spacing between interchanges may also be dependent on the spacing between ramps. The minimum spacing between the noses of adjacent ramps is given on Figure 940-5.

Consider either frontage roads or C-D roads when it is necessary to facilitate the operation of near-capacity volumes between closely spaced interchanges or ramp terminals. C-D roads may be required where cloverleaf loop ramps are involved or where a series of interchange ramps requires overlapping of the speed change lanes. Base the distance between successive ramp terminals on capacity requirements and check the intervening sections by weaving analysis to determine whether adequate capacity and sight distance and effective signing can be ensured without the use of auxiliary lanes or C-D roads.

(4) Route Continuity

Route continuity refers to the providing of a directional path along the length of a route designated by state route number. Provide the driver of a through route a path on which lane changes are minimized and other traffic operations occur to the right.

In maintaining route continuity, interchange configuration may not always favor the heavy traffic movement, but rather the through route. In this case, design the heavy traffic movements with multilane ramps, flat curves, and reasonably direct alignment.

(5) Drainage

Avoid interchanges located in proximity to natural drainage courses. These locations often result in complex and unnecessarily costly hydraulic structures.

The open areas within an interchange can be used for storm water detention facilities when these facilities are required.

(6) Uniformity of Exit Pattern

While interchanges are of necessity custom designed to fit specific conditions, it is desirable that the pattern of exits along a freeway have some degree of uniformity. From the standpoint of driver expectancy, it is desirable that each interchange have only one point of exit, located in advance of the crossroad.

940.05 Ramps

(1) Ramp Design Speed

The design speed for a ramp is based on the design speed for the freeway main line.

It is desirable for the ramp design speed at the connection to the freeway be equal to the free-flow speed of the freeway. Meet or exceed the upper range values from Figure 940-1 for the design speed at the ramp connection to the freeway. Transition the ramp design speed to provide a smooth acceleration or deceleration between the speeds at the ends of the ramp. However, do not reduce the ramp design speed below the lower range speed of 25 mph. For loop ramps, use a design speed as high as practical, but not less than 25 mph.

These design speed guidelines do not apply to the ramp in the area of the ramp terminal at-grade intersection. In the area of the intersection, a design speed of 15 mph for turning traffic or 0 mph for a stop condition is adequate. Use the allowed skew at the ramp terminal at-grade intersection to minimize ramp curvature.

For freeway-to-freeway ramps and C-D roads, the design speed at the connections to both freeways is the upper range values from Figure 940-1; however, with justification, the midrange values from Figure 940-1 may be used for the remainder of the ramp. When the design speed for the two freeways is different, use the higher design speed.

Existing ramps meet design speed requirements if acceleration or deceleration requirements are met (figure 940-8 or 940-10) and superelevation meets or will be corrected to meet the requirements in Chapter 642.

Main Line Design Speed mph		50	55	60	65	70	80
Ramp Design Speed (mph)	Upper Range	45	50	50	55	60	70
	Midrange	35	40	45	45	50	60
	Lower Range	25	25	25	25	25	25

Ramp Design Speed
Figure 940-1

(2) Sight Distance

Design ramps in accordance with provisions in Chapter 650 for stopping sight distances.

(3) Grade

The maximum grade for ramps for various design speeds is given in Figure 940-2.

Ramp Design Speed (mph)	25-30	35-40	45 and above
Desirable Grade (%)	5	4	3
Maximum Grade (%)	7	6	5
On one-way ramps down grades may be 2% greater.			

Maximum Ramp Grade
Figure 940-2

(4) Cross Section

Provide the minimum ramp widths given in Figure 940-3. Ramp traveled ways may require additional width to these minimums as one-way turning roadways. See Chapters 640 and 641 for additional information and roadway sections.

Number of Lanes		1	2
Traveled Way(1)		15(2)	25(3)
Shoulders	Right	8	8
	Left	2	4
Medians(4)		6	8

(1) See Chapter 641 for turning roadway widths. See Chapter 1050 for additional width when an HOV lane is present.
(2) May be reduced to 12 ft on tangents.
(3) Add 12 ft for each additional lane.
(4) The minimum median width is not less than that required for traffic control devices and their respective clearances.

Ramp Widths (ft)
Figure 940-3

Cross slope and superelevation requirements for ramp traveled way and shoulders are as given in Chapters 640 and 642 for roadways.

Whenever feasible, make the ramp cross slope at the ramp beginning or ending station equal to the cross slope of the through lane pavement. Where space is limited and superelevation runoff is long or when parallel connections are used, the superelevation transition may be ended beyond (for on-ramps) or begun in advance of (for off-ramps) the ramp beginning or ending station, provided that the algebraic difference in cross slope at the edge of the through lane and the cross slope of the ramp does not exceed 4%. In such cases, ensure smooth transitions for the edge of traveled way.

(5) Ramp Lane Increases

When off-ramp traffic and left-turn movement volumes at the ramp terminal at-grade intersection cause congestion, it may be desirable to add lanes to the ramp to reduce the queue length caused by turning conflicts. Make provision for the addition of ramp lanes whenever ramp exit or entrance volumes, after the design year, are expected to result in poor service. See Chapter 620 for width transition design.

(6) Ramp Meters

Ramp meters are used to allow a measured or regulated amount of traffic to enter the freeway. When operating in the "measured" mode, they release traffic at a measured rate to keep downstream demand below capacity and improve system travel times. In the "regulated" mode, they break up platoons of vehicles that occur naturally or result from nearby traffic signals. Even when operating at near capacity, a freeway main line can accommodate merging vehicles one or two at a time, while groups of vehicles will cause main line flow to break down.

The location of the ramp meter is a balance between the storage and acceleration requirements. Locate the ramp meter to maximize the available storage and so that the acceleration lane length, from a stop to the freeway main line design speed, is available from the stop bar to the merging point. With justification, the average main line running speed during the hours of meter operation may be used for the highway design speed to determine the minimum acceleration lane length from the ramp meter. See 940.06(4) for information on the design of on-connection acceleration lanes. See Chapter 860 for additional information on the design of ramp meters.

Driver compliance with the signal is required for the ramp meter to have the desired results. Consider enforcement areas with ramp meters.

Consider HOV bypass lanes with ramp meters. See Chapter 1050 for design data for ramp meter bypass lanes.

940.06 Interchange Connections

Provide uniform geometric design and uniform signing for exits and entrances, to the extent possible, in the design of a continuous freeway. Do not design an exit ramp as an extension of a main line tangent at the beginning of a main line horizontal curve.

Provide spacing between interchange connections as given by Figure 940-5.

Avoid on-connections on the inside of a main line curve, particularly when the ramp approach angle is accentuated by the main line curve, the ramp approach requires a reverse curve to connect to the main line, or the elevation difference will cause the cross slope to be steep at the nose.

Keep the use of mountable curb at interchange connections to a minimum. Justification is required when it is used adjacent to traffic expected to exceed 40 mph.

(1) Lane Balance

Design interchanges to the following principles of lane balance:

(a) At entrances, make the number of lanes beyond the merging of two traffic streams not less than the sum of all the lanes on the merging roadways less one. (See Figure 940-6a.)

(b) At exits, make the number of approach lanes equal the number of highway lanes beyond the exit plus the number of exit lanes less one. (See Figure 940-6a.) Exceptions to this are at a cloverleaf or at closely spaced interchanges with a continuous auxiliary lane between the entrance and exit. In these cases the auxiliary lane may be dropped at a single-lane, one lane reduction, off-connection with the number of approach lanes being equal to the sum of the highway lanes beyond the exit and the number of exit lanes. Closely spaced interchanges have a distance of less than 2,100 ft between the end of the acceleration lane and the beginning of the deceleration lane.

Maintain the basic number of lanes, as described in Chapter 620, through interchanges. When a two-lane exit or entrance is used, maintain lane balance with an auxiliary lane. (See Figure 940-6b.) The only exception to this is when the basic number of lanes is changed at an interchange.

(2) Main Line Lane Reduction

The reduction of a basic lane or an auxiliary lane may be made at a two-lane exit or may be made between interchanges. When a two-lane exit is used, provide a recovery area with a normal acceleration taper. When a lane is dropped between interchanges, drop it 1,500 to 3,000 ft from the end of the acceleration taper of the previous interchange. This will allow for adequate signing but not be so far that the driver

will become accustomed to the number of lanes and be surprised by the reduction. (See Figure 940-7.)

Reduce the traveled way width of the freeway by only one lane at a time.

(3) Sight Distance

Locate off-connections and on-connections on the main line to provide decision sight distance for a speed/path/direction change as described in Chapter 650.

(4) On-Connections

On-connections are the pavement at the end of on-ramps, connecting them to the main lane of a freeway. They have two parts, an acceleration lane and a taper. The acceleration lane allows entering traffic to accelerate to the freeway speed and evaluate gaps in the freeway traffic. The taper is for the entering vehicle to maneuver into the through lane.

On-connections are either taper type or parallel type. The tapered on-connection provides direct entry at a flat angle, reducing the steering control needed. The parallel on-connection adds a lane adjacent to the through lane for acceleration with a taper at the end. Vehicles merge with the through traffic with a reverse curve maneuver similar to a lane change. While the taper requires less steering control, the parallel is narrower at the end of the ramp and has a shorter taper at the end of the acceleration lane.

(a) Provide the minimum acceleration lane length, given on Figure 940-8, for each ramp design speed on all on-ramps. When the average grade of the acceleration lane is 3% or greater, multiply the distance from the Minimum Acceleration Lane Length table by the factor from the Adjustment Factor for Grades table.

For existing ramps that do not have significant accidents in the area of the connection with the freeway, the freeway posted speed may be used to calculate the acceleration lane length for preservation projects. If corrective action is indicated, use the freeway design speed to determine the length of the acceleration lane.

Document existing ramps to remain in place with an acceleration lane length less than to the design speed as a design exception. Also, include the following documentation in the project file: the ramp location, the acceleration length available, and the accident analysis that shows that there are not significant accidents in the area of the connection.

The acceleration lane is measured from the last point designed at each ramp design speed (usually the PT of the last curve for each design speed) to the last point with a ramp width of 12 ft. Curves designed at higher design speeds may be included as part of the acceleration lane length.

(b) For parallel type on-connections, provide the minimum gap acceptance length (L_g) to allow entering traffic to evaluate gaps in the freeway traffic and position the vehicle to use the gap. The length is measured beginning at the point that the left edge of traveled way for the ramp intersects the right edge of traveled way of the main line to the ending of the acceleration lane. (See Figures 940-9b and 9c.) The gap acceptance length and the acceleration length overlap with the ending point controlled by the longer of the two.

(c) Single-lane on-connections may be either taper type or parallel type. The taper type is preferred; however, the parallel may be used with justification. Design single-lane taper type on-connections as shown on Figure 940-9a and single lane parallel type on-connections as shown on Figure 940-9b.

(d) For two-lane on-connections, the parallel type is preferred. Design two-lane parallel on-connections as shown on Figure 940-9c. A capacity analysis will normally be the basis for determining whether a freeway lane or an auxiliary lane is to be provided.

When justification is documented, a two-lane tapered on-connection may be used. Design two-lane tapered on-connections in accordance with Figure 940-9d.

(5) Off-Connections

Off-connections are the pavement at the beginning of an off-ramp, connecting it to a main lane of a freeway. They have two parts, a taper for maneuvering out of the through traffic and a deceleration lane to slow to the speed of the first curve on the ramp. Deceleration is not assumed to take place in the taper.

Off-connections are either taper type or parallel type. The taper type is preferred because it fits the path preferred by most drivers. When a parallel type connection is used, drivers tend to drive directly for the ramp and not use the parallel lane. However, when a ramp is required on the outside of a curve, the parallel off-connection is preferred. An advantage of the parallel connection is that it is narrower at the beginning of the ramp.

(a) Provide the minimum deceleration lane length given on Figure 940-10 for each design speed for all off-ramps. Also, provide deceleration lane length to the end of the anticipated queue at the ramp terminal. When the average grade of the deceleration lane is 3% or greater, multiply the distance from the Minimum Deceleration Lane Length table by the factor from the Adjustment Factor for Grades table.

For existing ramps that do not have significant accidents in the area of the connection with the freeway, the freeway posted speed may be used to calculate the deceleration lane length for preservation projects. If corrective action is indicated, use the freeway design speed to determine the length of the deceleration lane.

Document existing ramps to remain in place with a deceleration lane length less than to the design speed as a design exception. Also, include the following documentation in the project file: the ramp location, the deceleration length available, and the accident analysis that shows that there are not significant accidents in the area of the connection.

The deceleration lane is measured from the point where the taper reaches a width of 12 ft to the first point designed at each ramp design speed (usually the PC of the first curve for each design speed). Curves designed at higher design speeds may be included as part of the deceleration lane length.

(b) Gores, Figures 940-11a and 11b, are decision points that must be clearly seen and understood by approaching drivers. In a series of interchanges along a freeway, it is desirable that the gores be uniform in size, shape, and appearance.

The paved area between the physical nose and the gore nose is the reserve area. It is reserved for the installation of an impact attenuator. The minimum length of the reserve area is controlled by the design speed of the main line. (See Figures 940-11a and 11b.)

In addition to striping, raised pavement marker rumble strips may be placed for additional warning and delineation at gores. See the Standard Plans for striping and rumble strip details.

The accident rate in the gore area is greater than at other locations. Keep the unpaved area beyond the gore nose as free of obstructions as possible to provide a clear recovery area. Grade this unpaved area as nearly level with the roadways as possible. Avoid placing obstructions such as heavy sign supports, luminaire poles, and structure supports in the gore area.

When an obstruction must be placed in a gore area, provide an impact attenuator (Chapter 720) and barrier (Chapter 710). Place the beginning of the attenuator as far back in the reserve area as possible, preferably after the gore nose.

(c) For single-lane off-connections, the taper type is preferred. Use the design shown on Figure 940-12a for tapered single-lane off-connections. When justification is documented, a parallel single-lane off-connection, as shown on Figure 940-12b, may be used.

(d) The single-lane off-connection with one lane reduction, Figure 940-12c, is only used when the conditions from lane balance for a single lane exit, one lane reduction, are met.

(e) The tapered two-lane off-connection design shown on Figure 940-12d is preferred where the number of freeway lanes is to be reduced, or

where high volume traffic operations will be improved by the provision of a parallel auxiliary lane and the number of freeway lanes is to be unchanged.

The parallel two-lane off-connection, Figure 940-12e, allows less operational flexibility than the taper, requiring more lane changes. Use a parallel two-lane off-connection only with justification.

(6) Collector Distributor Roads

A C-D road can be within a single interchange, through two closely spaced interchanges, or continuous through several interchanges. Design C-D roads that connect three or more interchanges to be two lanes wide. All others may be one or two lanes in width, depending on capacity requirements. Consider intermediate connections to the main line for long C-D roads. See Figure 940-13a for designs of collector distributor outer separations. Use Design A, with concrete barrier, when adjacent traffic in either roadway is expected to exceed 40 mph. Design B, with mountable curb, may be used only when adjacent traffic will not exceed 40 mph.

(a) The details shown in Figure 940-13b apply to all single-lane C-D road off-connections. Where conditions require two-lane C-D road off-connections, a reduction in the number of freeway lanes, the use of an auxiliary lane, or a combination of these, design it as a normal off-connection per 940.06(5).

(b) Design C-D road on-connections as required by Figure 940-13c.

(7) Loop Ramp Connections

Loop ramp connections at cloverleaf interchanges are distinguished from other ramp connections by a low speed ramp on-connection followed closely by an off-connection for another low speed ramp. The loop ramp connection design is shown on Figure 940-14. The minimum distance between the ramp connections is dependent on a weaving analysis. When the connections are spaced far enough apart that weaving is not a consideration, design the on-connection per 940.06(4) and off-connection per 940.06(5).

(8) Weaving Sections

Weaving sections are highway segments where one-way traffic streams cross by merging and diverging. Weaving sections may occur within an interchange, between closely spaced interchanges, or on segments of overlapping routes. Figure 940-15 gives the length of the weaving section for preliminary design. The total weaving traffic is the sum of the traffic entering from the ramp to the main line and the traffic leaving the main line to the exit ramp in equivalent passenger cars. For trucks, a passenger car equivalent of two may be estimated. Use the *Highway Capacity Manual* for the final design of weaving sections.

Because weaving sections cause considerable turbulence, interchange designs that eliminate weaving or remove it from the main roadway are desirable. Use C-D roads for weaving between closely spaced ramps when adjacent to high speed highways. C-D roads are not required for weaving on low speed roads.

940.07 Ramp Terminal Intersections at Crossroads

Design ramp terminal intersections at grade with crossroads as intersections at grade. (See Chapter 910.) Whenever possible, design ramp terminals to discourage wrong way movements. Review the location of ramp intersections at grade with crossroads to ensure signal progression if the intersection becomes signalized in the future. Provide intersection sight distance as described in Chapter 910.

In urban and suburban areas, match design speed at the ramp terminal to the speed of the crossroad. Provide steeper intersection angles between the ramp terminal and crossroad to slow motor vehicle traffic speeds and reduce crossing distances for bicyclists and pedestrians.

The intersection configuration requirements for ramp terminals is normally the same as for other intersections. One exception to this is an angle point is allowed between an off ramp and an on ramp. This is because the through movement of traffic getting off the freeway, going through the intersection, and back on the freeway is minor.

Another exception is at ramp terminals where the through movement is eliminated (for example at a Single Point interchange). For ramp terminals that have two wye connections, one for right turns and the other for left turns and no through movement, the intersection angle has little meaning and does not need to be considered.

940.08 Interchanges on Two-Lane Highways

Occasionally, the first stage of a conventional interchange will be built with only one direction of the main roadway and operated as a two-lane two-way roadway until the ultimate roadway is constructed.

The design of interchanges on two-lane two-way highways may vary considerably from traditional concepts due to the following conditions:

- The potential for center-line-crossing related accidents due to merge conflicts or motorist confusion.
- The potential for wrong way or U-turn movements.
- Future construction considerations.
- Traffic type and volume.
- The proximity to multilane highway sections that might influence the driver's impression that these roads are also multilane.

The deceleration taper is required for all exit conditions. Design the entering connection with either the normal acceleration taper or a "button hook" type configuration with a stop condition before entering the main line. Consider the following items:

- Design the stop condition connection in accordance with the requirements for a Tee intersection in Chapter 910. Use this type of connection only when an acceleration lane is not possible. Provide decision sight distance as described in Chapter 650.
- Since each design will probably vary from project to project, analyze each project for most efficient signing placement such as one way, two way, no passing, do not enter, directional arrows, guide posts, and traffic buttons.
- Prohibit passing through the interchange area on two lane highways by means of signing, pavement marking, or a combination of both. A 4 ft median island highlighted with raised pavement markers and diagonal stripes is the preferred treatment. When using a 4 ft median system, extend the island 500 ft beyond any merging ramp traffic acceleration taper. The width for the median can be provided by reducing each shoulder 2 ft through the interchange. (See Figure 940-16.)
- Inform both the entering and through motorists of the two-lane two-way characteristic of the main line. Include signing and pavement markings.
- Use as much of the ultimate roadway as possible. Where this is not possible, leave the area for future lanes and roadway ungraded.
- Design and construct temporary ramps as if they were permanent unless second stage construction is planned to rapidly follow the first. In all cases, design the connection to meet the safety needs of the traffic. (See Figure 940-16.)

940.09 Interchange Plans

Figure 940-17 is a sample showing the general format and data required for interchange design plans.

Compass directions (W-S Ramp) or crossroad names (E-C Street) may be used for ramp designation to realize the most clarity for each particular interchange configuration and circumstance.

Include the following as applicable:

- Classes of highway and design speeds for main line and crossroads (Chapter 440).
- Curve data on main line, ramps, and crossroads.
- Numbers of lanes and widths of lanes and shoulders on main line, crossroads, and ramps.

- Superelevation diagrams for the main line, the crossroad, and all ramps (may be submitted on separate sheets).
- Channelization (Chapter 910).
- Stationing of ramp connections and channelization.
- Proposed right of way and access control treatment (Chapters 1410, 1420, and 1430).
- Delineation of all crossroads, existing and realigned (Chapter 910).
- Traffic data necessary to justify the proposed design. Include all movements.
- For HOV direct access connections on the left, include the statement that the connection will be used solely by HOVs or will be closed.

Prepare a preliminary contour grading plan for each completed interchange. Show the desired contours of the completed interchange including details of basic land formation, slopes, graded areas, or other special features. Coordinate the contour grading with the drainage design and the roadside development plan.

Alternative designs considered, studied, and rejected may be shown as reduced scale diagrams with a brief explanation of the advantages and disadvantages of the alternative designs, including the recommended design.

940.10 Documentation

A list of documents that are to be presereved [in the Design Documentation Package (DDP) or the project File (PF) is on the following website: http://www.wsdot.wa.gov/eesc/design/projectdev/

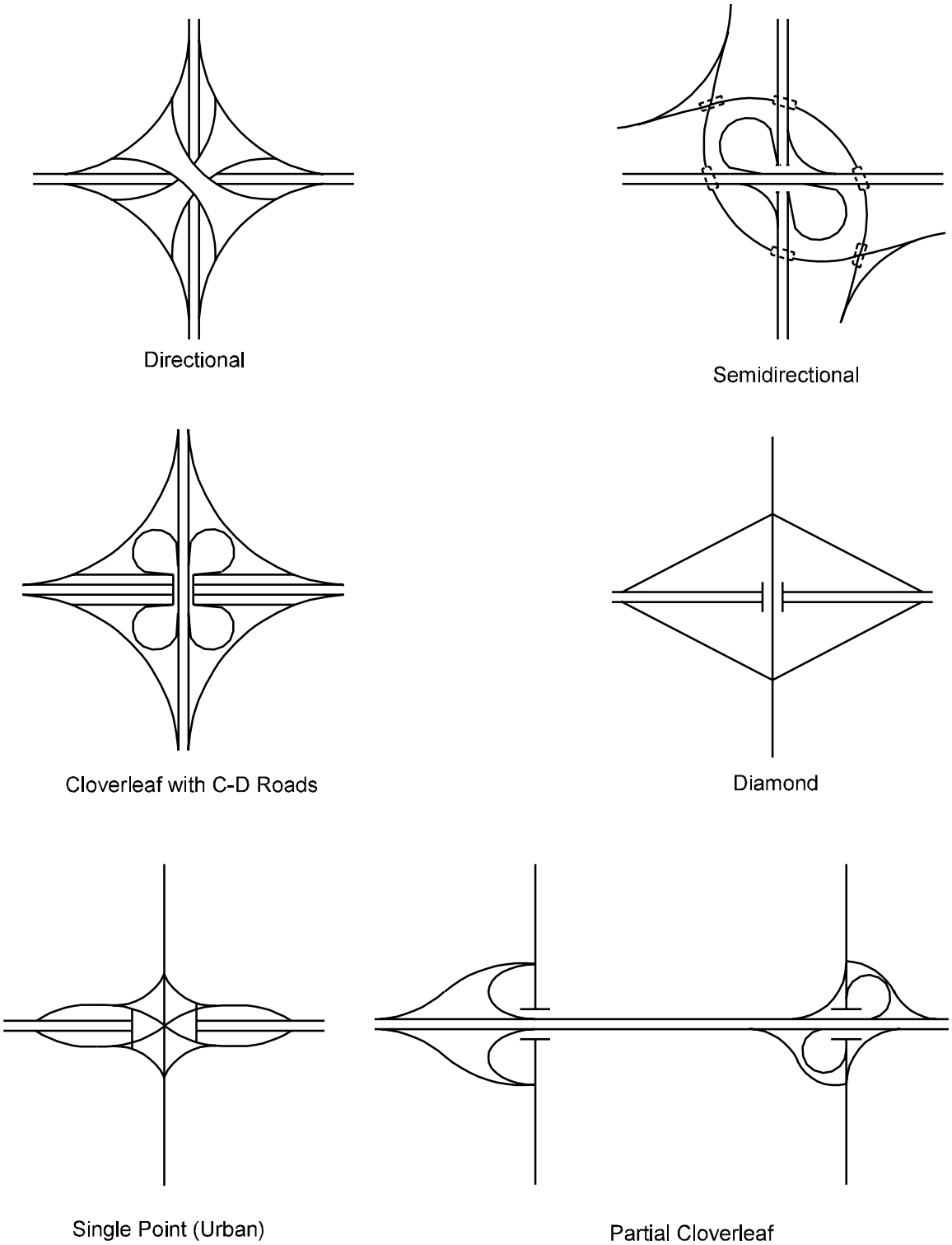

Basic Interchange Patterns
Figure 940-4

On - On or Off - Off		Off - On		Turning Roadways		On - Off (weaving)			
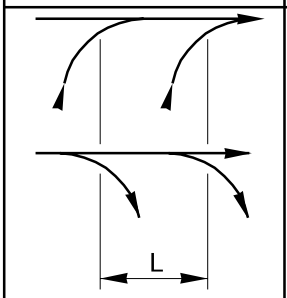		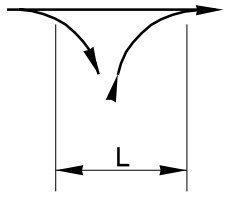		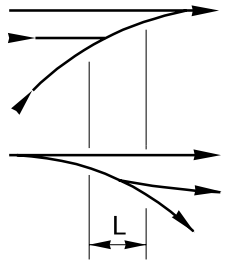		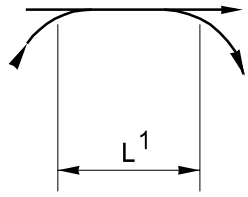			
Freeway	C-D Road	Freeway	C-D Road	System Interchange 2	Service Interchange 3	A	B	C	D
1000	800	500	400	800	600	2000	1600	1600	1000

L = Minimum distance in feet from nose to nose. The nose is the beginning of the unpaved area within the gore for an exit and the ending of the unpaved area for an entrance.

A Between two interchanges connected to a freeway, a system interchange[2] and a service interchange[3].

B Between two interchanges connected to a C-D road, a system interchange[2] and a service interchange[3].

C Between two interchanges connected to a freeway, both service interchanges[3].

D Between two interchanges connected to a C-D road, both service interchanges[3].

Notes:

These recommendations are based on operational experience, need for flexibility, and adequate signing. Check them in accordance with Figure 940-15 and the procedures outlined in the *Highway Capacity Manual* and use the larger value.

(1) With justification, these values may be reduced for cloverleaf ramps.

(2) A system interchange is a freeway to freeway interchange.

(3) A service interchange is a freeway to local road interchange.

Minimum Ramp Connection Spacing
Figure 940-5

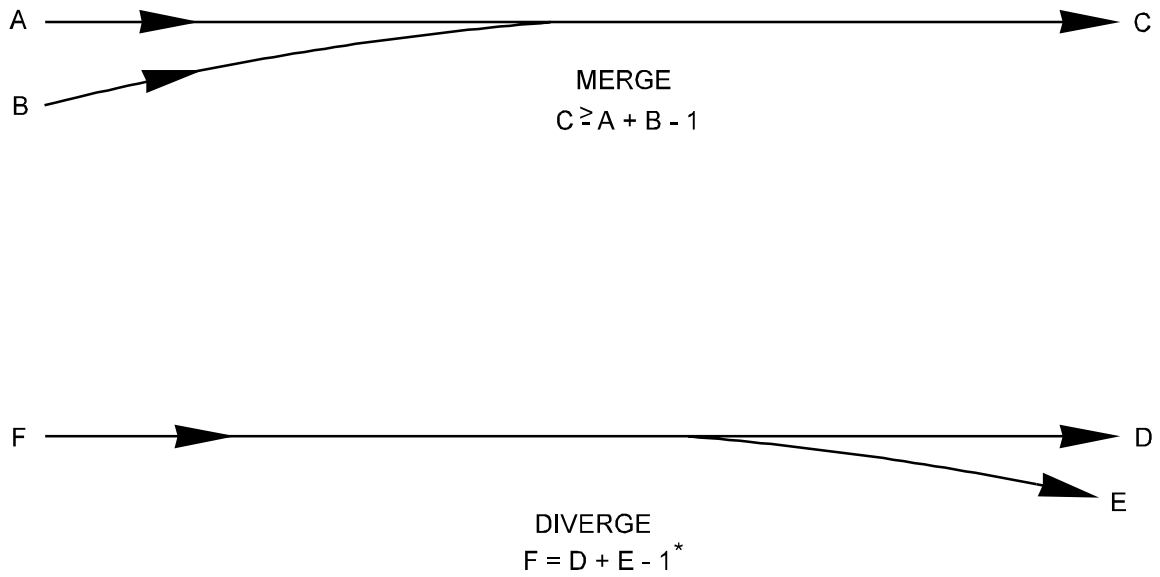

* Number of lanes, F, may be more by one lane only, provided the lane dropped is an auxiliary lane between closely spaced entrance and exit ramps.

Lane Balance
Figure 940-6a

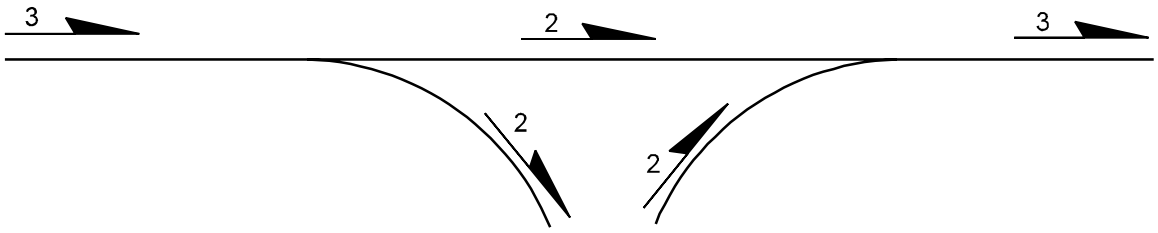

UNDESIRABLE Lane balance but no compliance with basic number of lanes.

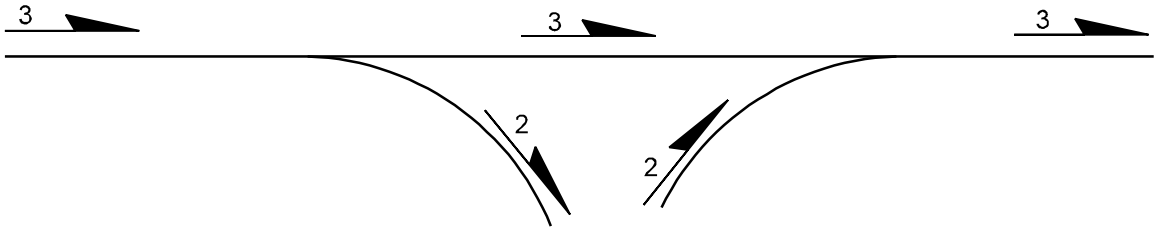

UNDESIRABLE No lane balance but compliance with basic number of lanes.

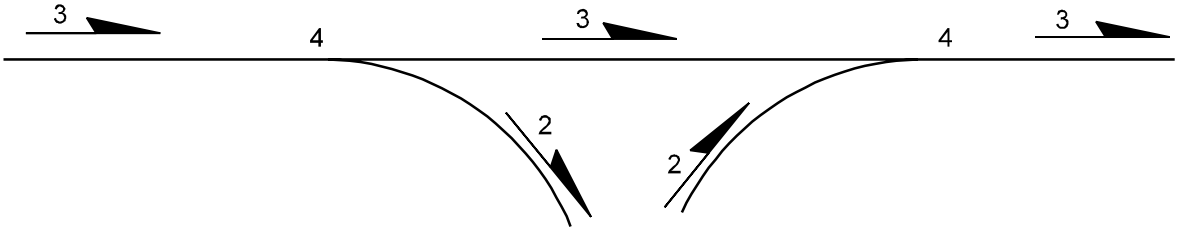

DESIRABLE Compliance with both lane balance and number of lanes.

Lane Balance
Figure 940-6b

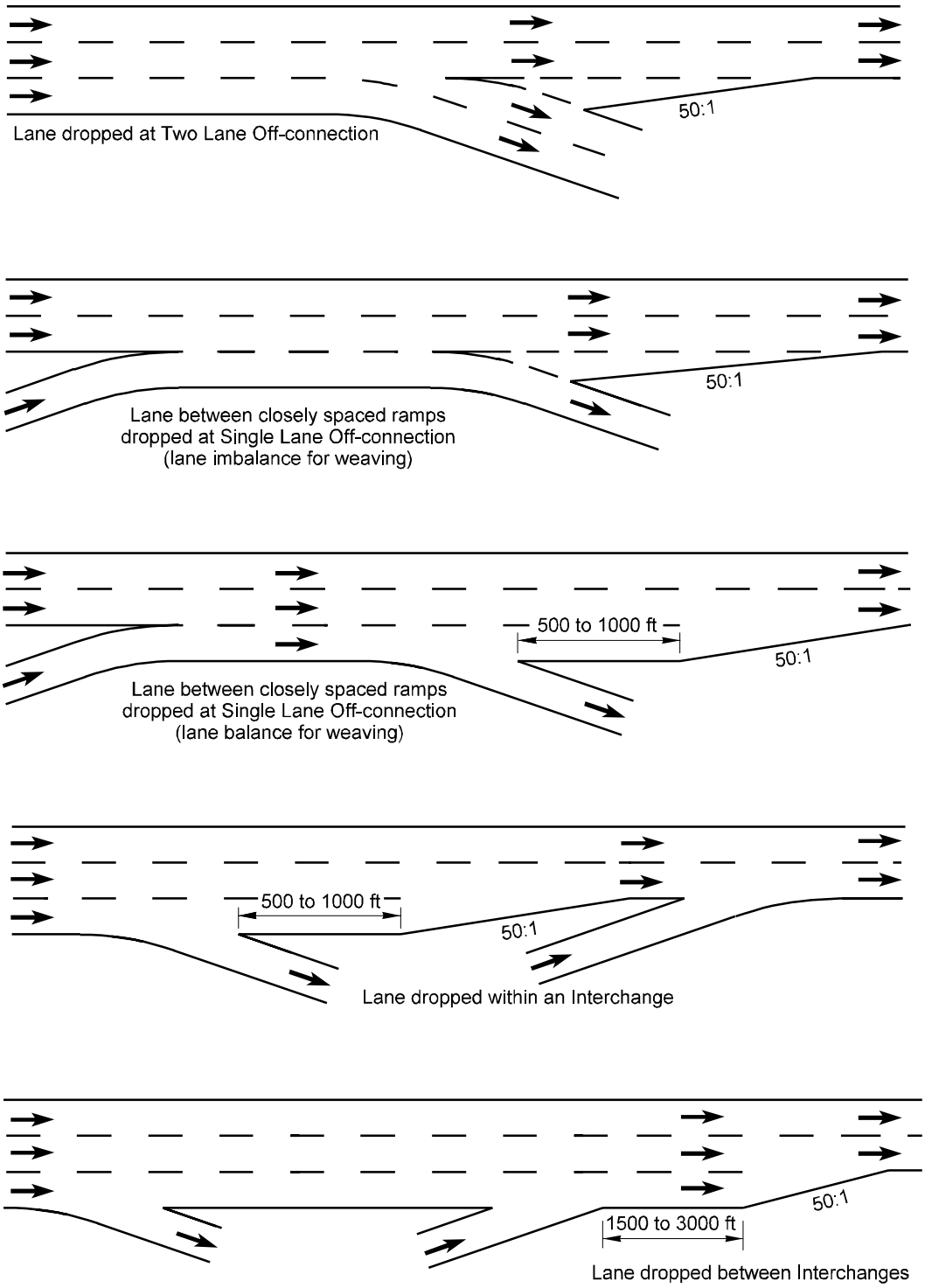

Main Line Lane Reduction Alternatives
Figure 940-7

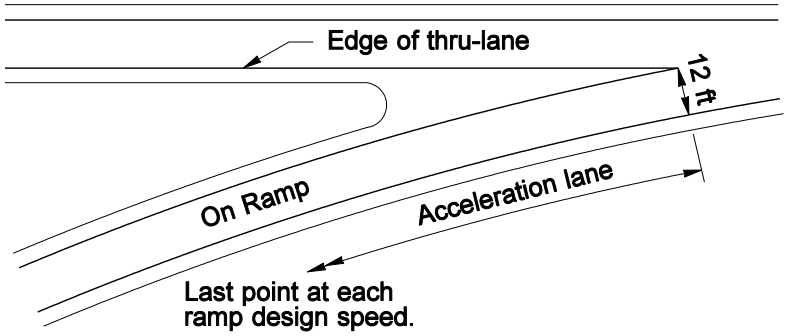

Highway Design Speed (mph)	Ramp Design Speed (mph)										
	0	15	20	25	30	35	40	45	50	60	70
30	180	140									
35	280	220	160								
40	360	300	270	210	120						
45	560	490	440	380	280	160					
50	720	660	610	550	450	350	130				
55	960	900	810	780	670	550	320	150			
60	1200	1140	1100	1020	910	800	550	420	180		
65	1410	1350	1310	1220	1120	1000	770	600	370		
70	1620	1560	1520	1420	1350	1230	1000	820	580	210	
80	2000	1950	1890	1830	1730	1610	1380	1200	970	590	210

Minimum Acceleration Lane Length (ft)

Highway Design Speed (mph)	Grade	Up Grade				Down Grade
		Ramp Design Speed				All Ramp Design Speeds
		20	30	40	50	
40	3% to less than 5%	1.3	1.3			0.70
45		1.3	1.35			0.675
50		1.3	1.4	1.4		0.65
55		1.35	1.45	1.45		0.625
60		1.4	1.5	1.5	1.6	0.60
70		1.5	1.6	1.7	1.8	0.60
40	5% or more	1.5	1.5			0.60
45		1.5	1.6			0.575
50		1.5	1.7	1.9		0.55
55		1.6	1.8	2.05		0.525
60		1.7	1.9	2.2	2.5	0.50
70		2.0	2.2	2.6	3.0	0.50

Adjustment Factors for Grades Greater than 3%

Acceleration Lane Length
Figure 940-8

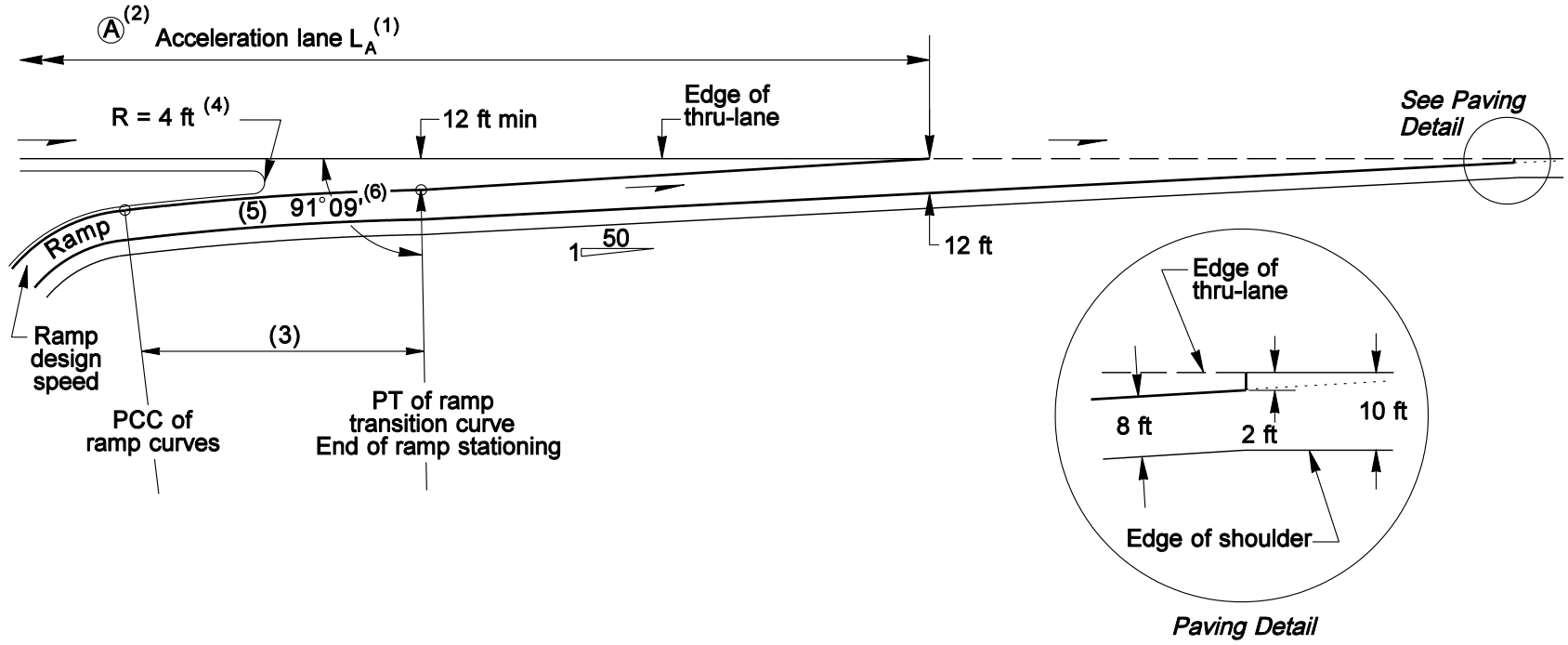

Notes:

(1) See Figure 940-8 for acceleration lane length L_A.

(2) Point A is the point controlling the ramp design speed.

(3) A transition curve with a minimum radius of 3,000 ft is desirable. The desirable length is 300 ft. When the main line is on a curve to the left, the transition may vary from a 3,000 ft radius to tangent to the main line.

(4) Radius may be reduced when concrete barrier is placed between the ramp and main line.

(5) For ramp lane and shoulder widths, see Figure 940-3.

(6) Approximate angle to establish ramp alignment.

(7) For Striping, see the Standard Plans.

On-Connection (Single-Lane, Taper Type)
Figure 940-9a

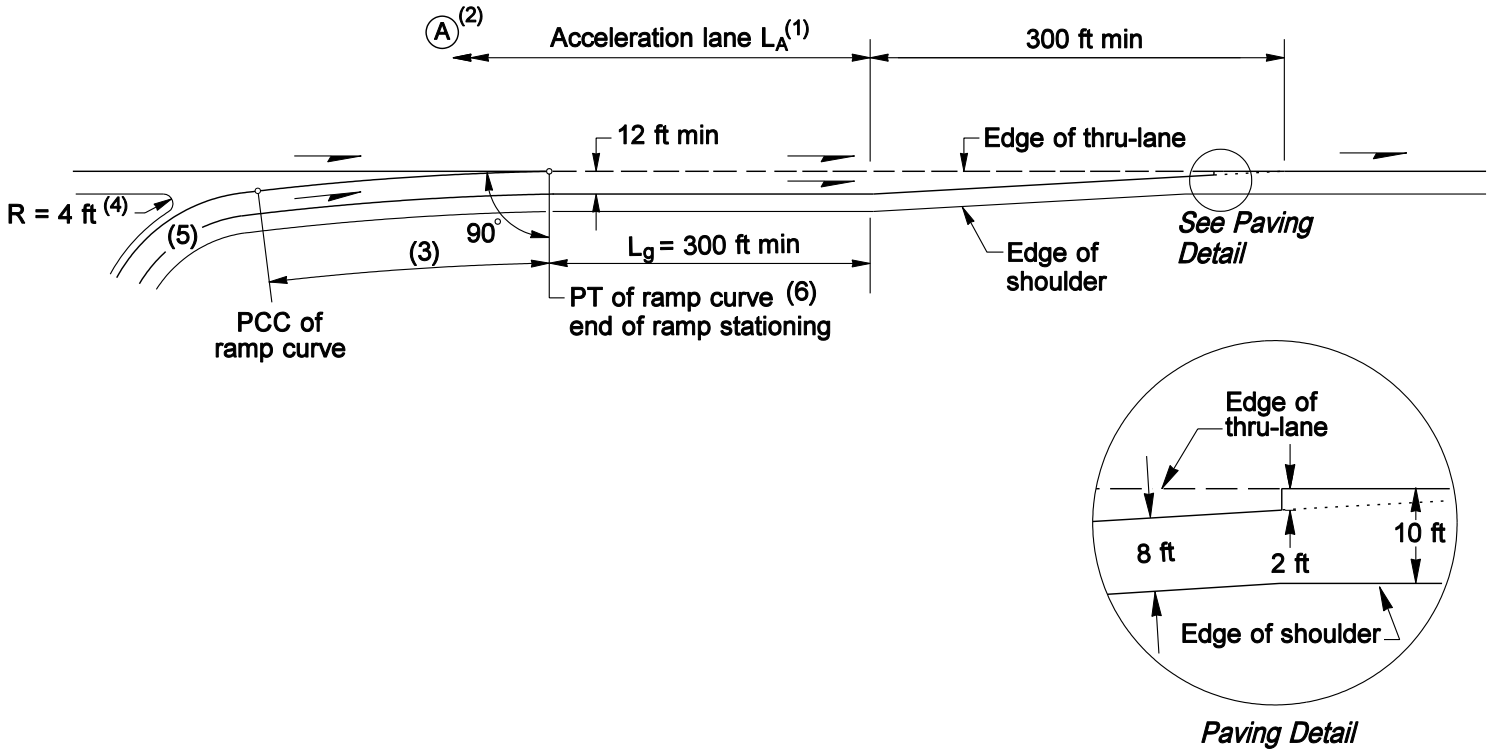

Notes:

(1) See Figure 940-8 for acceleration lane length L_A.

(2) Point Ⓐ is the point controlling the ramp design speed.

(3) A transition curve with a minimum radius of 3,000 ft is desirable. The desirable length is 300 ft. When the main line is on a curve to the left, the transition may vary from a 3,000 ft radius to tangent to the main line. The transition curve may be replaced by a 50:1 taper with a minimum length of 300 ft.

(4) Radius may be reduced when concrete barrier is placed between the ramp and main line.

(5) For ramp lane and shoulder widths, see Figure 940-3.

(6) Ramp stationing may be extended to accommodate superelevation transition.

(7) For striping, see the Standard Plans.

On-Connection (Single-Lane, Parallel Type)
Figure 940-9b

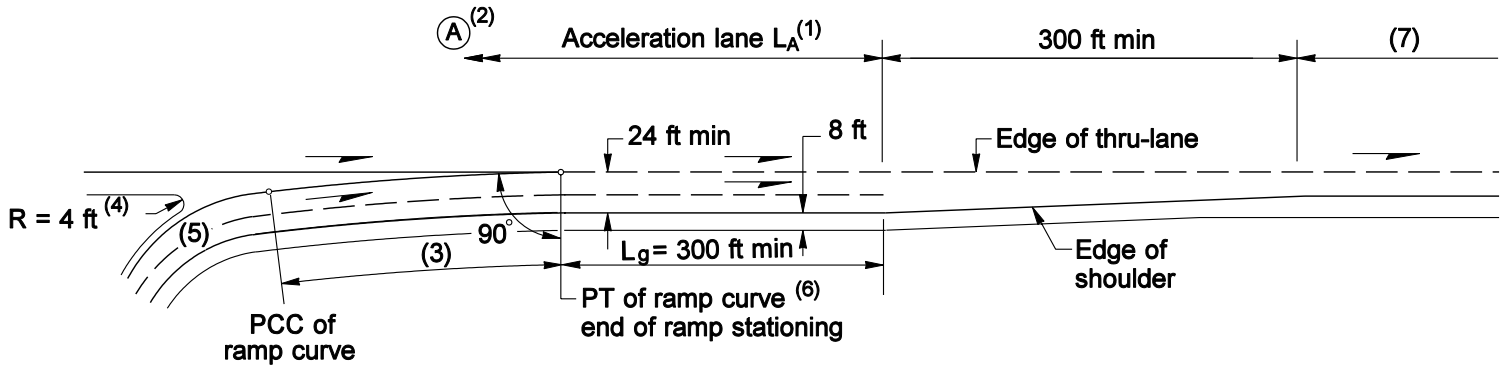

Notes:

(1) See Figure 940-8 for acceleration lane length L_A.

(2) Point (A) is the point controlling the ramp design speed.

(3) A transition curve with a minimum radius of 3,000 ft is desirable. The desirable length is 300 ft. When the main line is on a curve to the left, the transition may vary from a 3,000 ft radius to tangent to the main line. The transition curve may be replaced by a 50:1 taper with a minimum length of 300 ft.

(4) Radius may be reduced when concrete barrier is placed between the ramp and main line.

(5) For ramp lane and shoulder widths, see figure 940-3.

(6) Ramp stationing may be extended to accommodate superelevation transition.

(7) Added lane or 1,500 ft auxiliary lane plus 600 ft taper.

(8) For striping, see the Standard Plans.

On-Connection (Two-Lane, Parallel Type)
Figure 940-9c

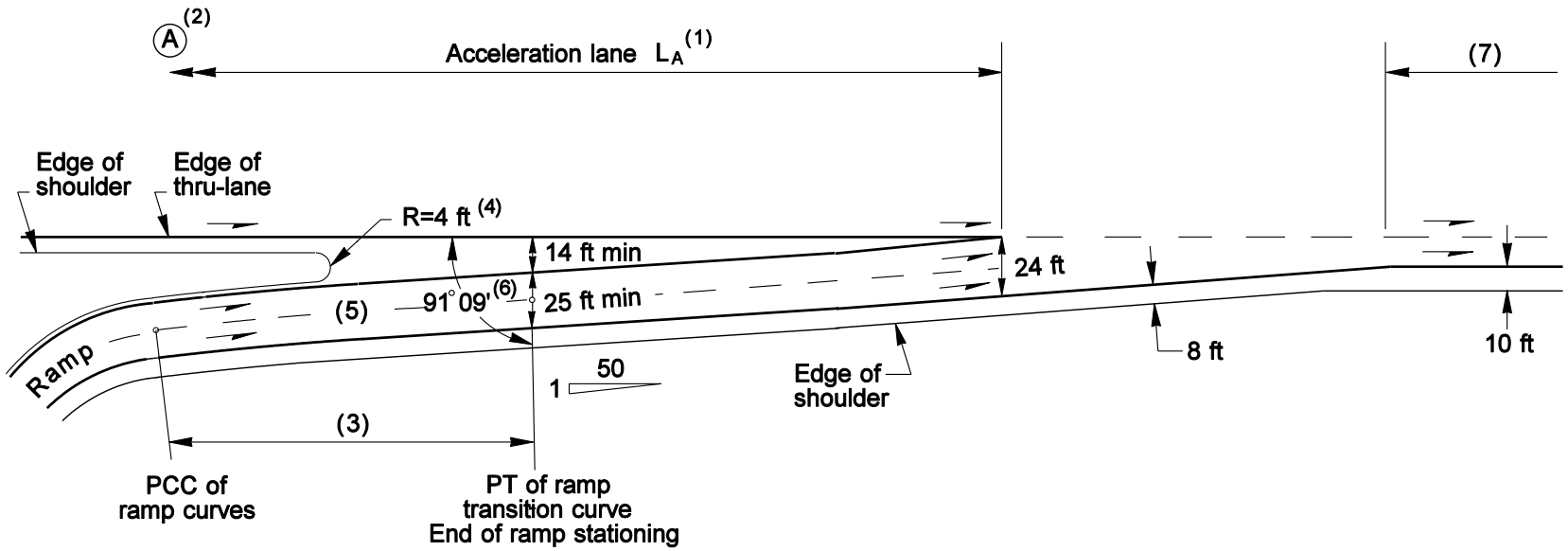

Notes:

(1) See Figure 940-8 for acceleration lane length L_A.

(2) Point (A) is the point controlling the ramp design speed.

(3) A transition curve with a minimum radius of 3,000 ft is desirable. The desirable length is 300 ft. When the main line is on a curve to the left, the transition may vary from a 3,000 ft radius to tangent to the main line.

(4) Radius may be reduced when concrete barrier is placed between the ramp and main line.

(5) For ramp lane and shoulder widths, see figure 940-3.

(6) Approximate angle to establish ramp alignment.

(7) Added lane or 1,500 ft auxiliary lane plus 600 ft taper.

(8) For striping, see the Standard Plans.

On-Connection (Two-Lane, Taper Type)
Figure 940-9d

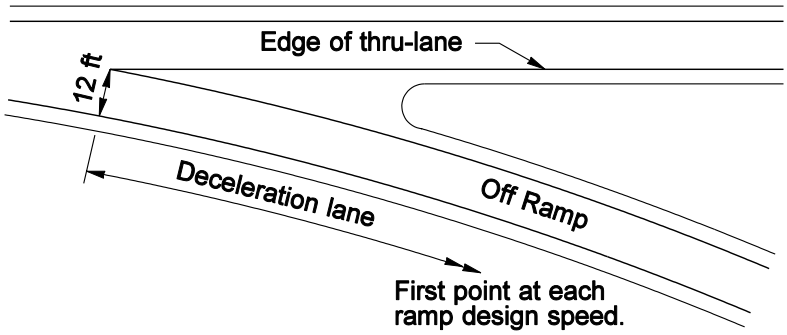

Highway Design Speed (mph)	Ramp Design Speed (mph)										
	0	15	20	25	30	35	40	45	50	60	70
30	235	200	170	140							
35	280	250	210	185	150						
40	320	295	265	235	185	155					
45	385	350	325	295	250	220	155				
50	435	405	385	355	315	285	225	175			
55	480	455	440	410	380	350	285	235	180		
60	530	500	480	460	430	405	350	300	240		
65	570	540	520	500	470	440	390	340	280	185	
70	615	590	570	550	520	490	440	390	340	240	
80	735	710	690	670	640	610	555	510	465	360	265

Minimum Deceleration Length (ft)

Grade	Up Grade	Down Grade
3% to less than 5%	0.9	1.2
5% or more	0.8	1.35

Adjustment Factors for Grades Greater than 3%

Deceleration Lane length
Figure 940-10

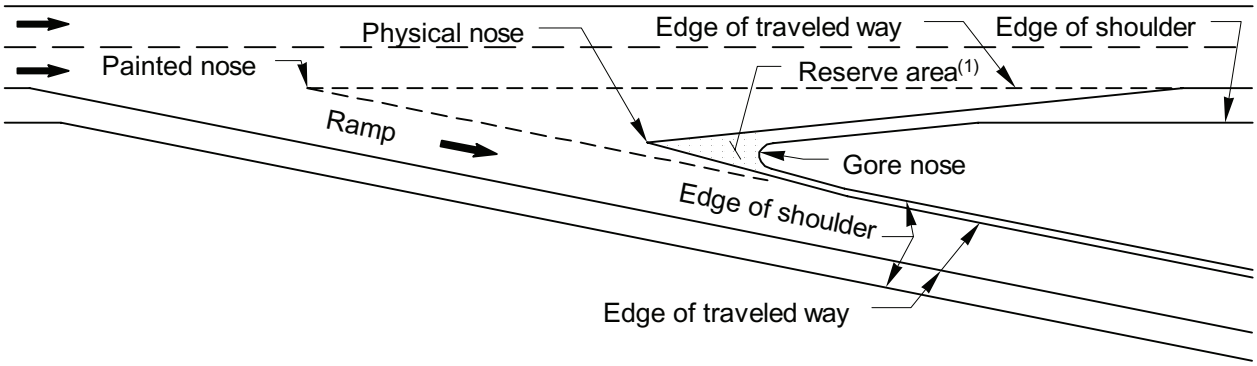

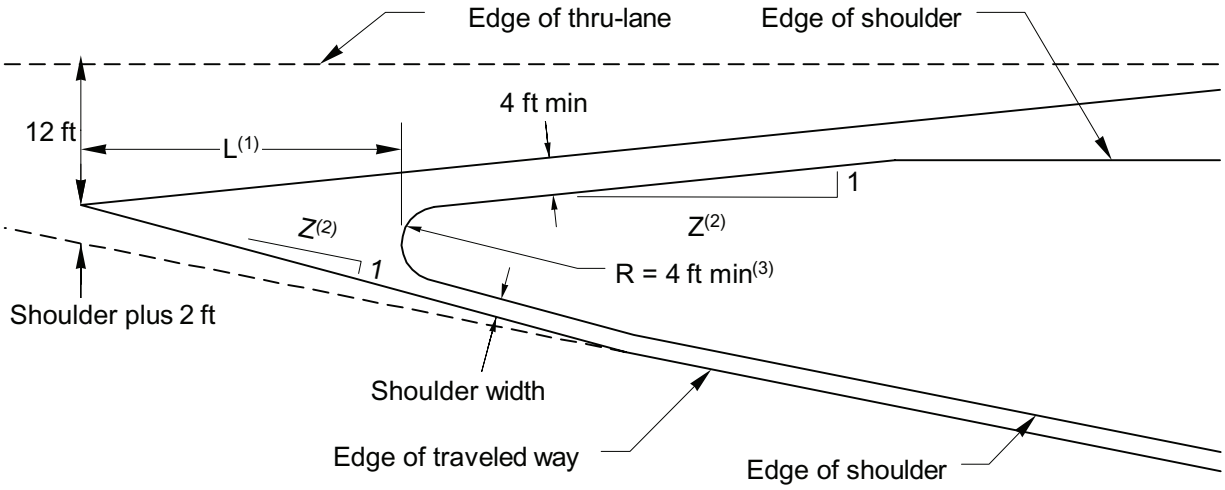

Notes:

(1) The reserve area length (L) is not less than:

Main Line Design Speed (mph)	40	45	50	55	60	65	70	80
L (ft)	25	30	35	40	45	50	55	70

(2) $Z = \frac{\text{Design Speed}}{2}$, Design speed is for the main line.

(3) R may be reduced, when protected by an impact attenuator.

Gore Area Characteristics
Figure 940-11a

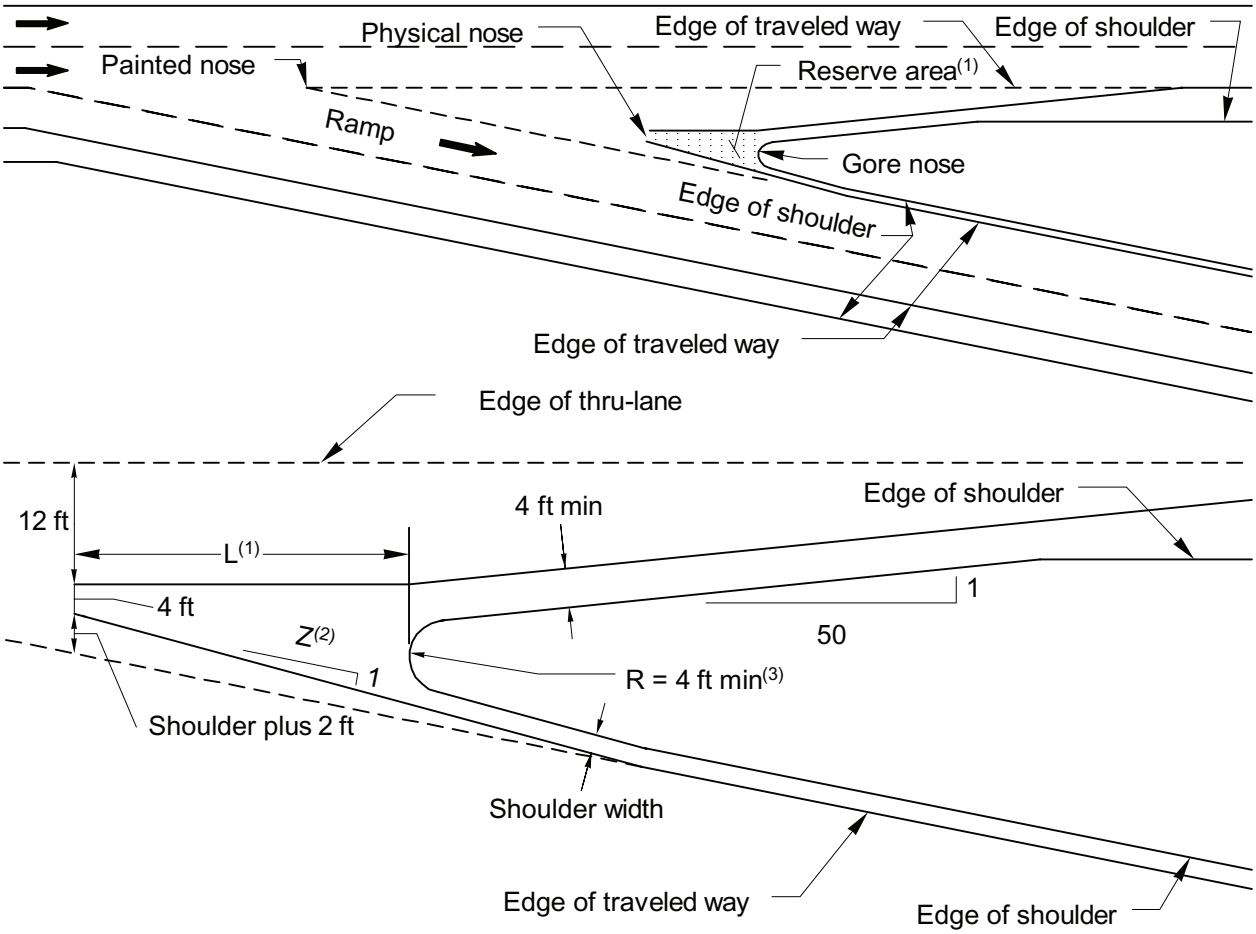

Notes:

(1) The reserve area length (L) is not less than:

Main Line Design Speed (mph)	40	45	50	55	60	65	70	80
L (ft)	25	30	35	40	45	50	55	70

(2) $Z=\frac{\text{Design Speed}}{2}$, Design speed is for the main line.

(3) R may be reduced, when protected by an impact attenuator.

Gore Area Characteristics
Figure 940-11b

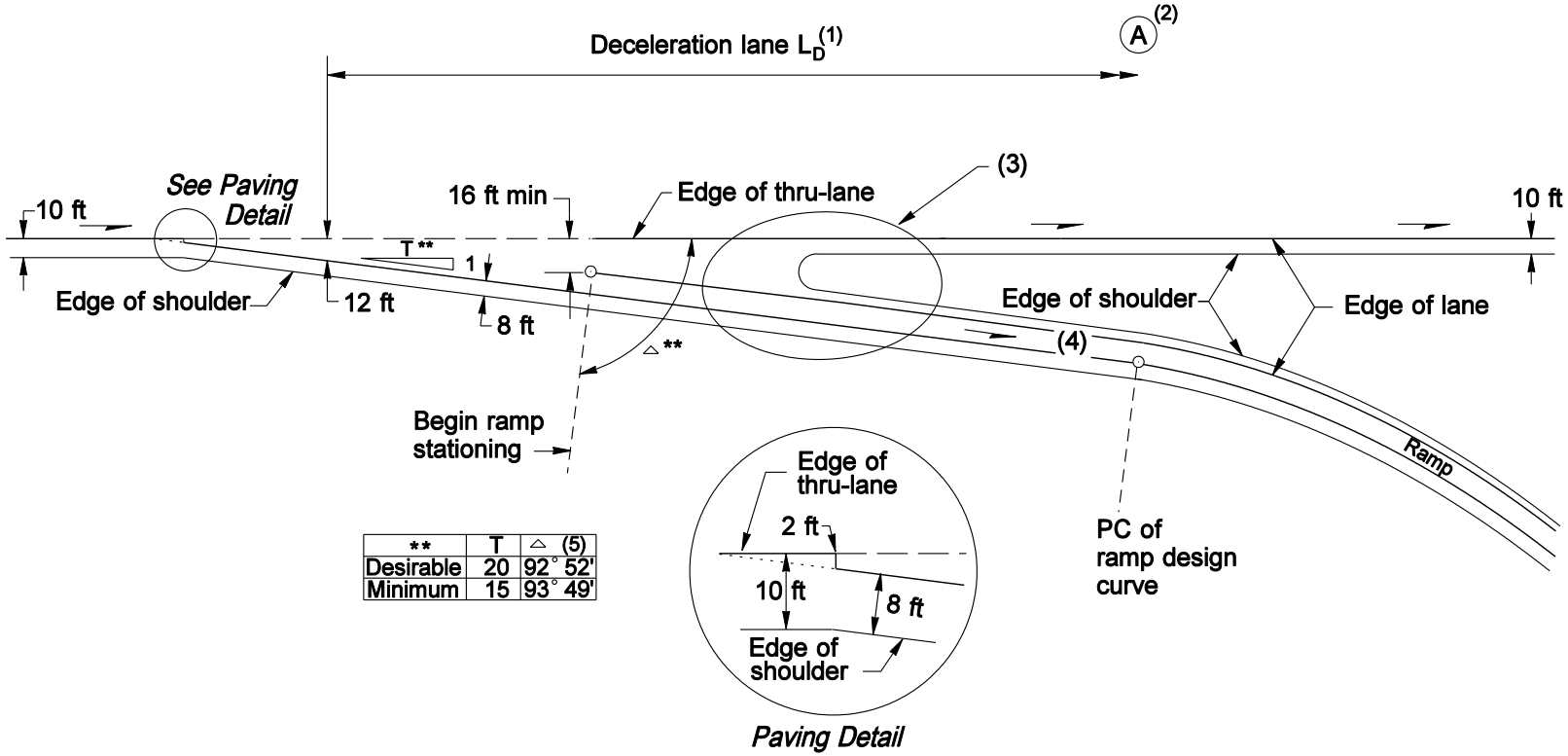

**	T	△ (5)
Desirable	20	92° 52'
Minimum	15	93° 49'

Notes:

(1) See Figure 940-10 for deceleration lane length L_D.

(2) Point (A) is the point controlling the ramp design speed.

(3) See Figure 940-11a for gore details.

(4) For ramp lane and shoulder widths, see Figure 940-3.

(5) Approximate angle to establish ramp alignment.

(6) For striping, see the Standard Plans.

Off-Connection (Single-Lane, Taper Type)
Figure 940-12a

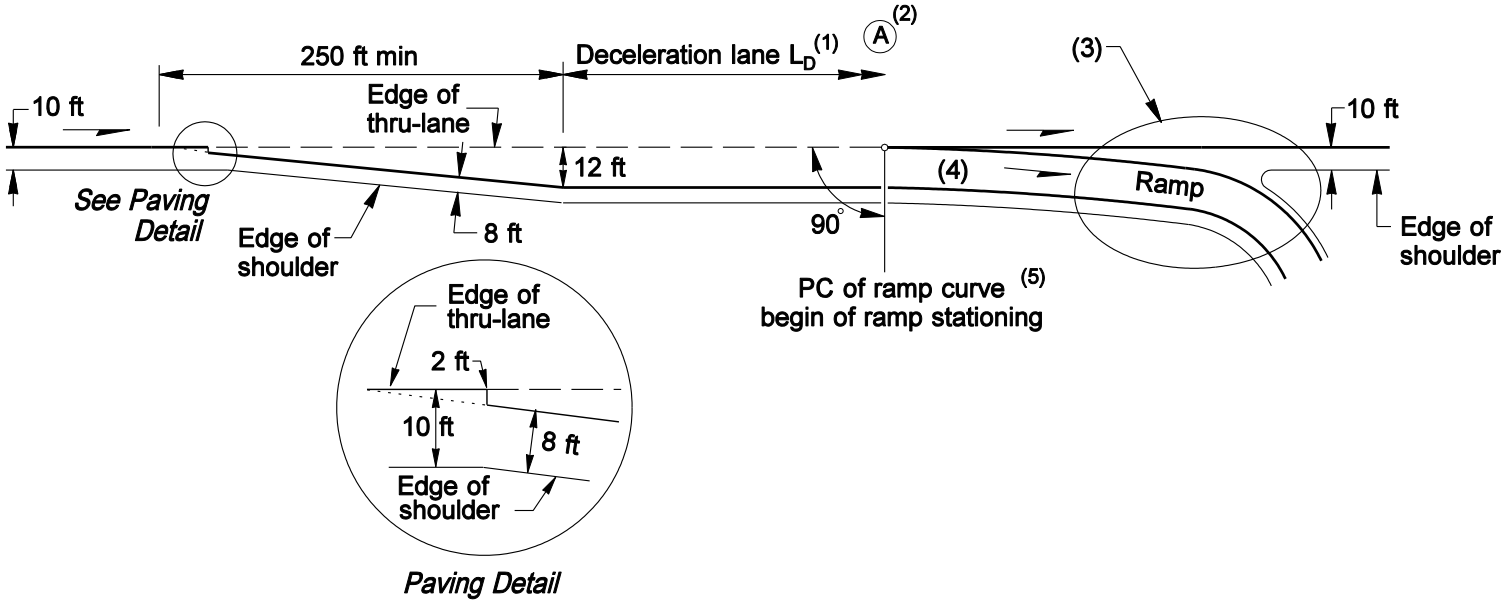

Notes:

(1) See Figure 940-10 for deceleration lane length L_D.

(2) Point (A) is the point controlling the ramp design speed.

(3) See Figure 940-11a for gore details.

(4) For ramp lane and shoulder widths, see Figure 940-3.

(5) Ramp Stationing may be extended to accommodate superelevation transition.

(6) For striping, see the Standard Plans.

Off-Connection (Single-Lane, Parallel Type)
Figure 940-12b

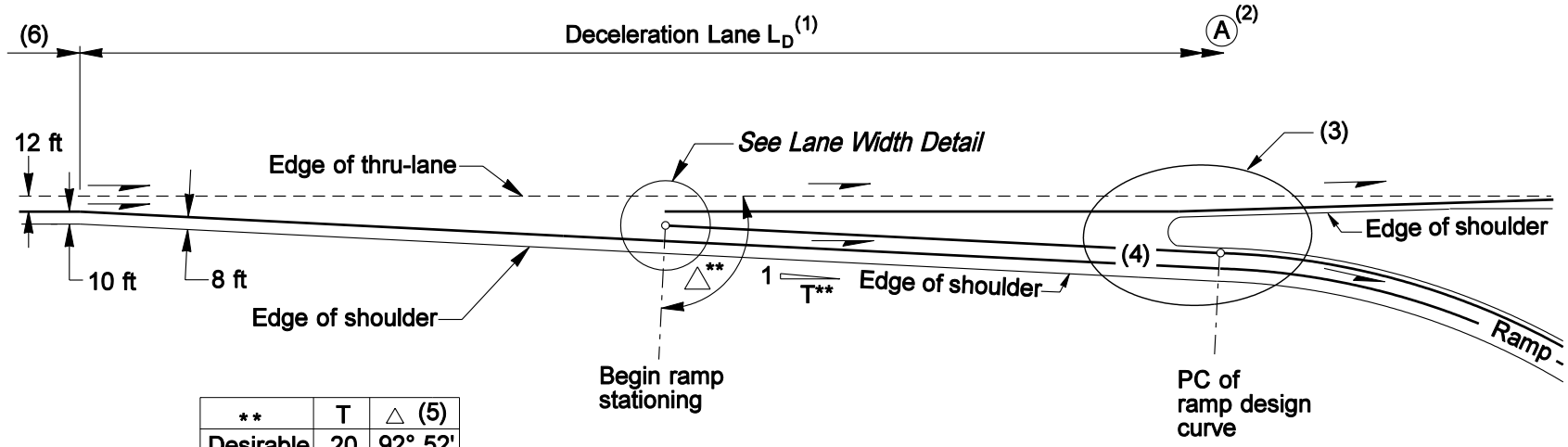

**	T	△ (5)
Desirable	20	92° 52'
Minimum	15	93° 49'

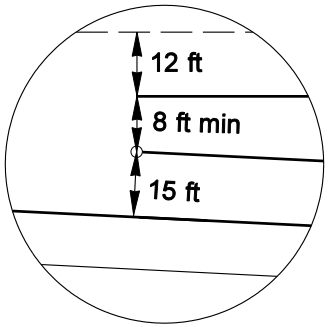

Lane Width Detail

Notes:

(1) See Figure 940-10 for deceleration lane length L_D.

(2) Point (A) is the point controlling the ramp design speed.

(3) See Figure 940-11b for gore details.

(4) For ramp lane and shoulder widths, see Figure 940-3.

(5) Approximate angle to establish ramp alignment.

(6) Auxiliary lane between closely spaced interchanges to be dropped.

(7) For striping, see the Standard Plans.

Off-Connection (Single-Lane, One-Lane Reduction)
Figure 940-12c

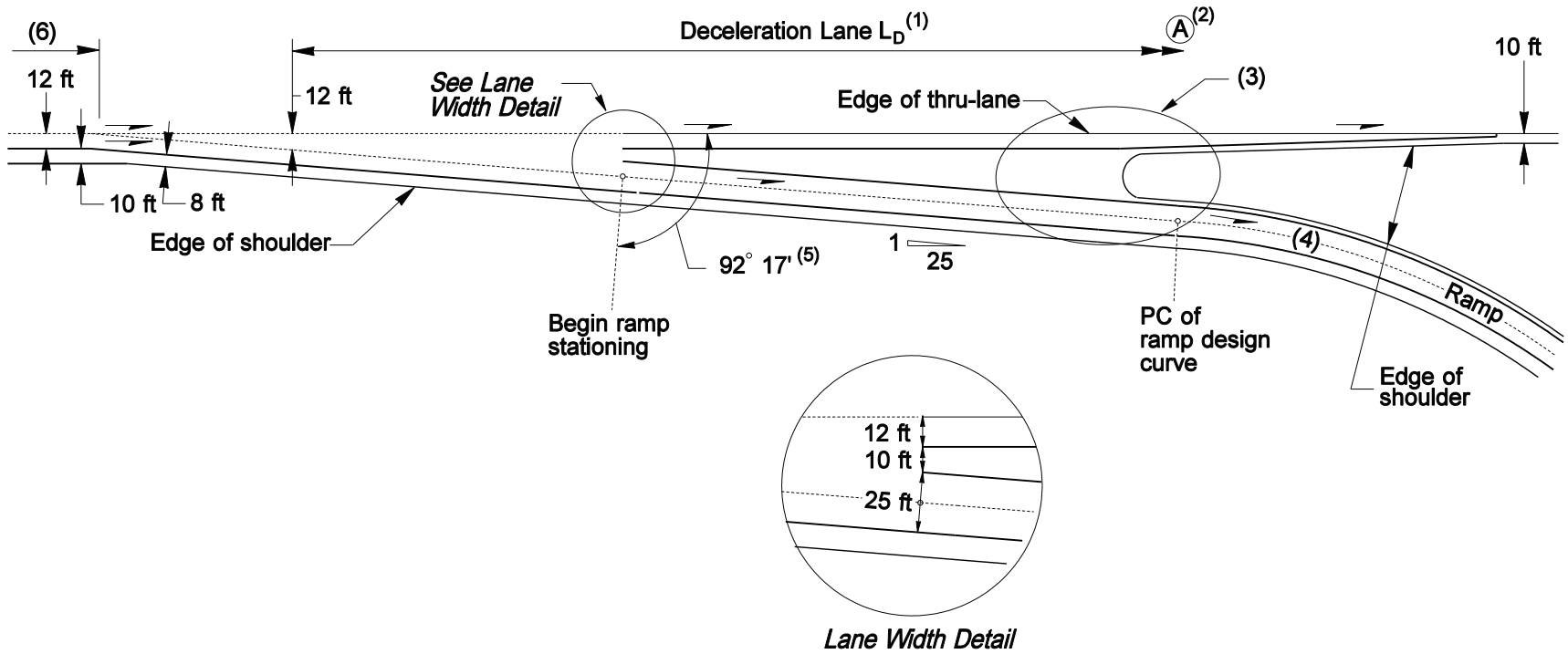

Notes:

(1) See Figure 940-10 for deceleration lane length L_D.

(2) Point Ⓐ is the point controlling the ramp design speed.

(3) See Figure 940-11b for gore details.

(4) For ramp lane and shoulder widths, see Figure 940-3.

(5) Approximate angle to establish ramp alignment.

(6) Lane to be dropped or auxiliary lane with a minimum length of 1,500 ft with a 300 ft taper.

(7) For striping, see the Standard Plans.

Off-Connection (Two-Lane, Taper Type)
Figure 940-12d

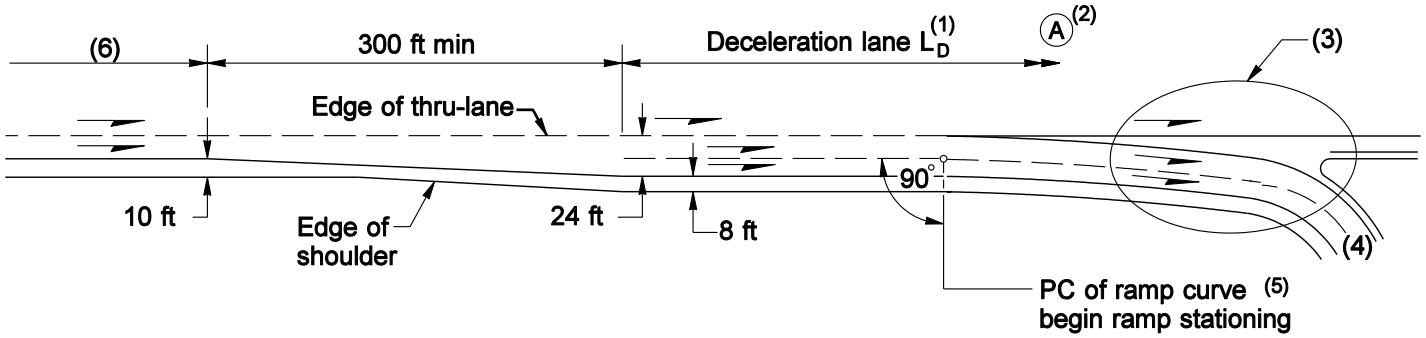

Notes:

(1) See Figure 940-10 for deceleration lane length L_D.

(2) Point (A) is the point controlling the ramp design speed.

(3) See Figure 940-11b for gore details.

(4) For ramp lane and shoulder widths, see Figure 940-3.

(5) Ramp stationing may be extended to accommodate superelevation transition.

(6) Lane to be dropped or auxiliary lane with a minimum length of 1,500 ft with a 300 ft taper.

(7) For striping, see the Standard Plans.

Off-Connection (Two-Lane, Parallel Type)
Figure 940-12e

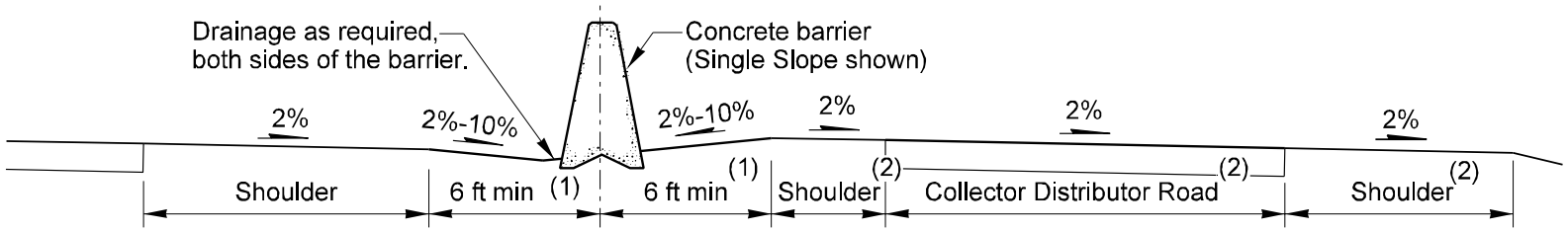

Design A

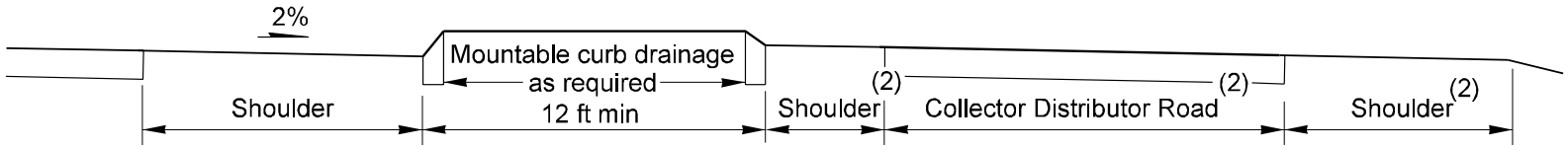

Design B
(For facilities with speeds of 40 MPH or less, only)

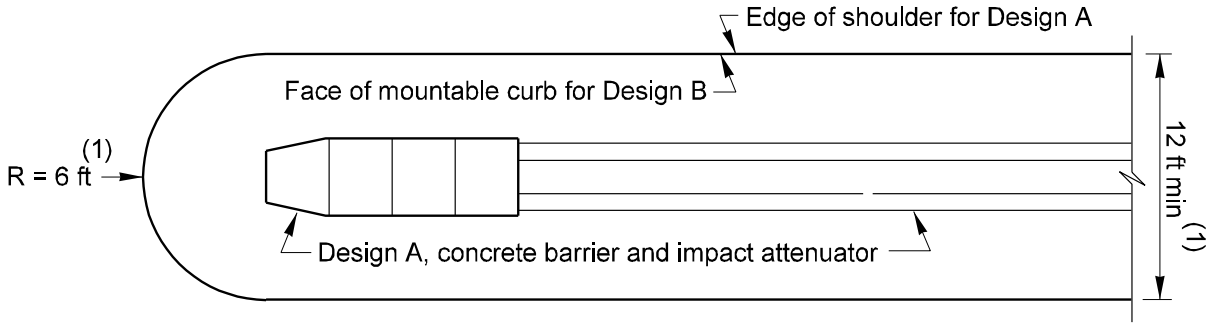

Notes:

(1) With justification, the concrete barrier may be placed with 2 ft between the edge of either shoulder and the face of barrier. The minimum width between the edge of through-shoulder and the edge of C-D road shoulder will be reduced to 6 ft, and the radius at the nose will be reduced to 3 ft.

(2) For collector distributor road lane and shoulder widths, see ramp lane and shoulder widths, Figure 940-3.

Collector Distributor (Outer Separations)
Figure 940-13a

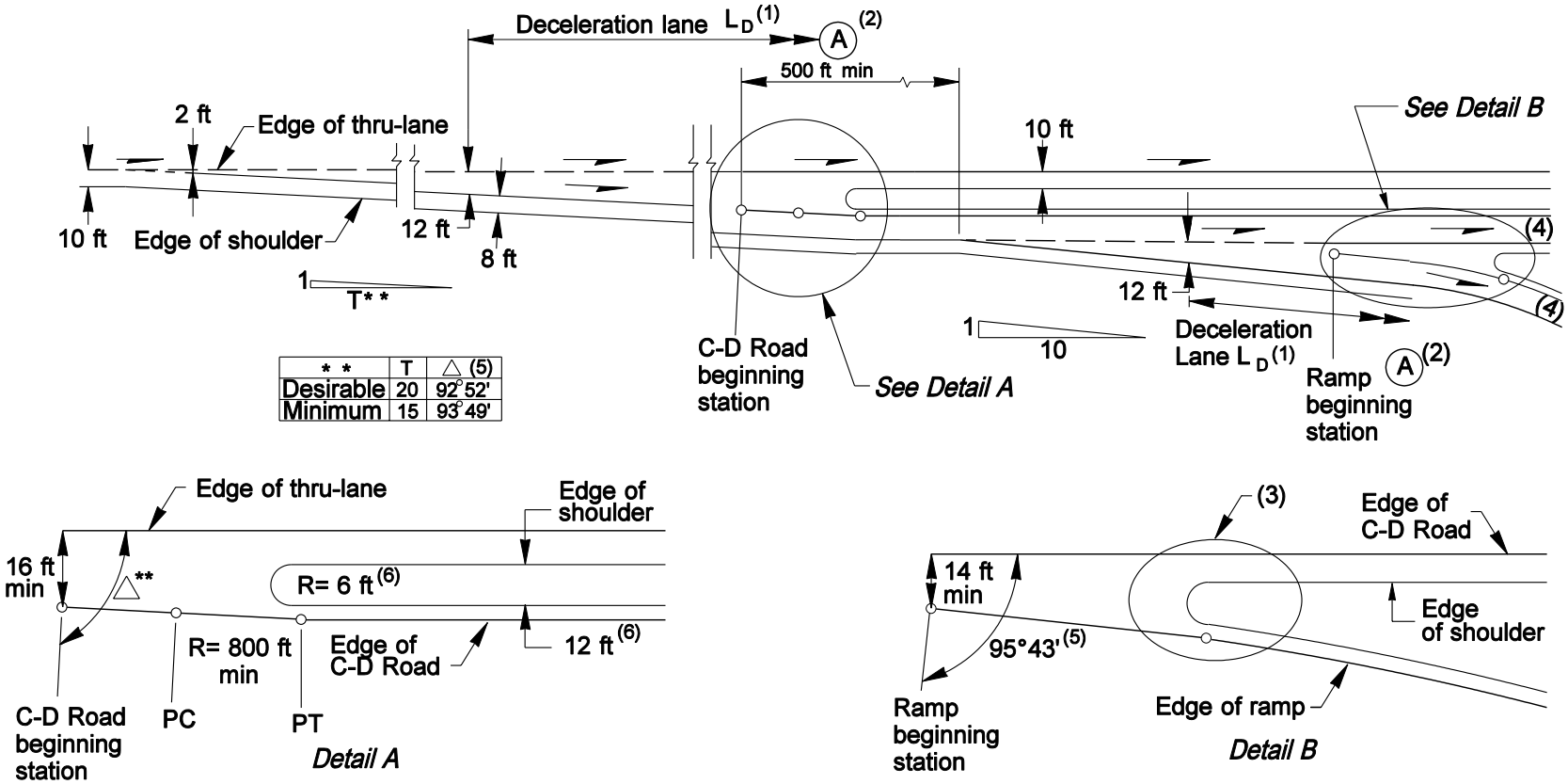

* *	T	△ (5)
Desirable	20	92°52'
Minimum	15	93°49'

Notes:

(1) See Figure 940-10 for deceleration lane length L_D.

(2) Point (A) is the point controlling the C-D road or ramp design speed.

(3) See Figure 940-11a for gore details.

(4) For C-D road and ramp lane and shoulder widths, see Figure 940-3.

(5) Approximate angle to establish alignment.

(6) May be reduced with justification. (See Figure 940-13a.)

(7) For striping, see the Standard Plans.

Collector Distributor (Off-Connections)
Figure 940-13b

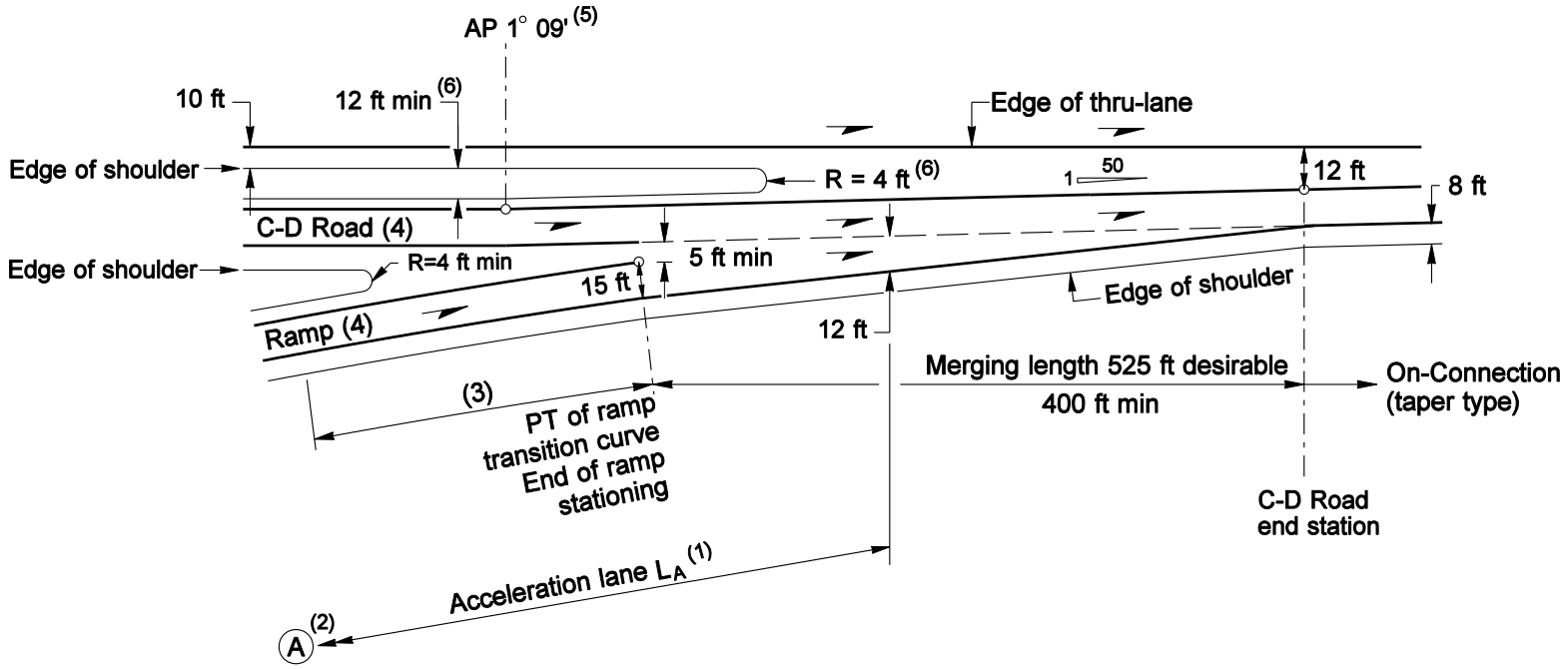

Notes:

(1) See Figure 940-8 for acceleration lane length L_A.

(2) Point (A) is the point controlling the ramp design speed.

(3) A transition curve with a minimum radius of 3,000 ft is desirable. The desirable length is 300 ft. When the C-D road is on a curve to the left, the transition may vary from a 3,000 ft radius to tangent to the C-D road.

(4) For C-D road and ramp lane and shoulder widths, see Figure 940-3.

(5) Approximate angle to establish alignment.

(6) May be reduced with justification. (See Figure 940-13a.)

(7) For striping, see the Standard Plans.

Collector Distributor (On-Connections)
Figure 940-13c

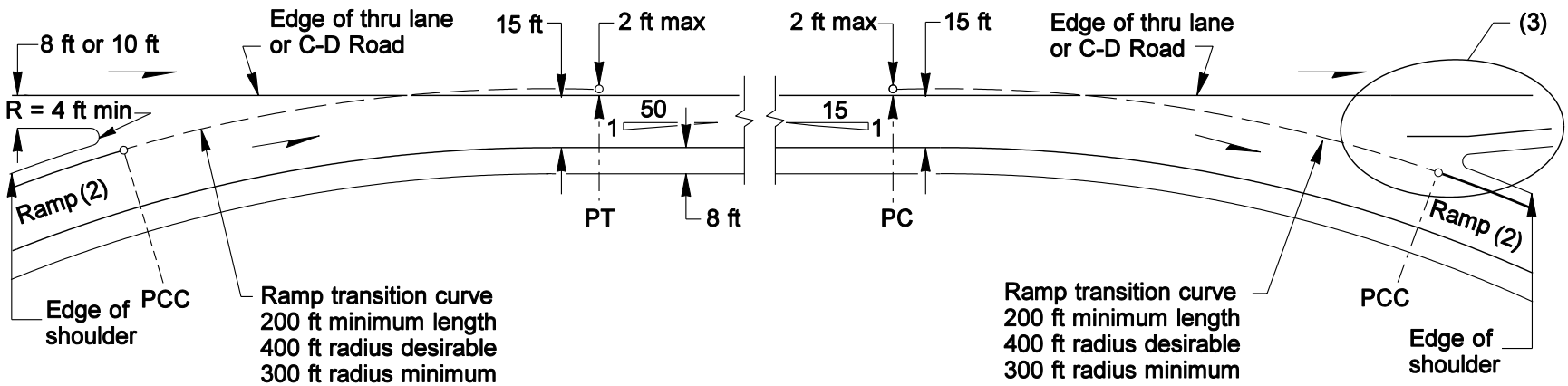

Notes:

(1) See Figure 940-15 for required minimum weaving length.

(2) For minimum ramp lane and shoulder widths, see Figure 940-3.

(3) See Figure 940-11b for gore details.

Loop Ramps Connections
Figure 940-14

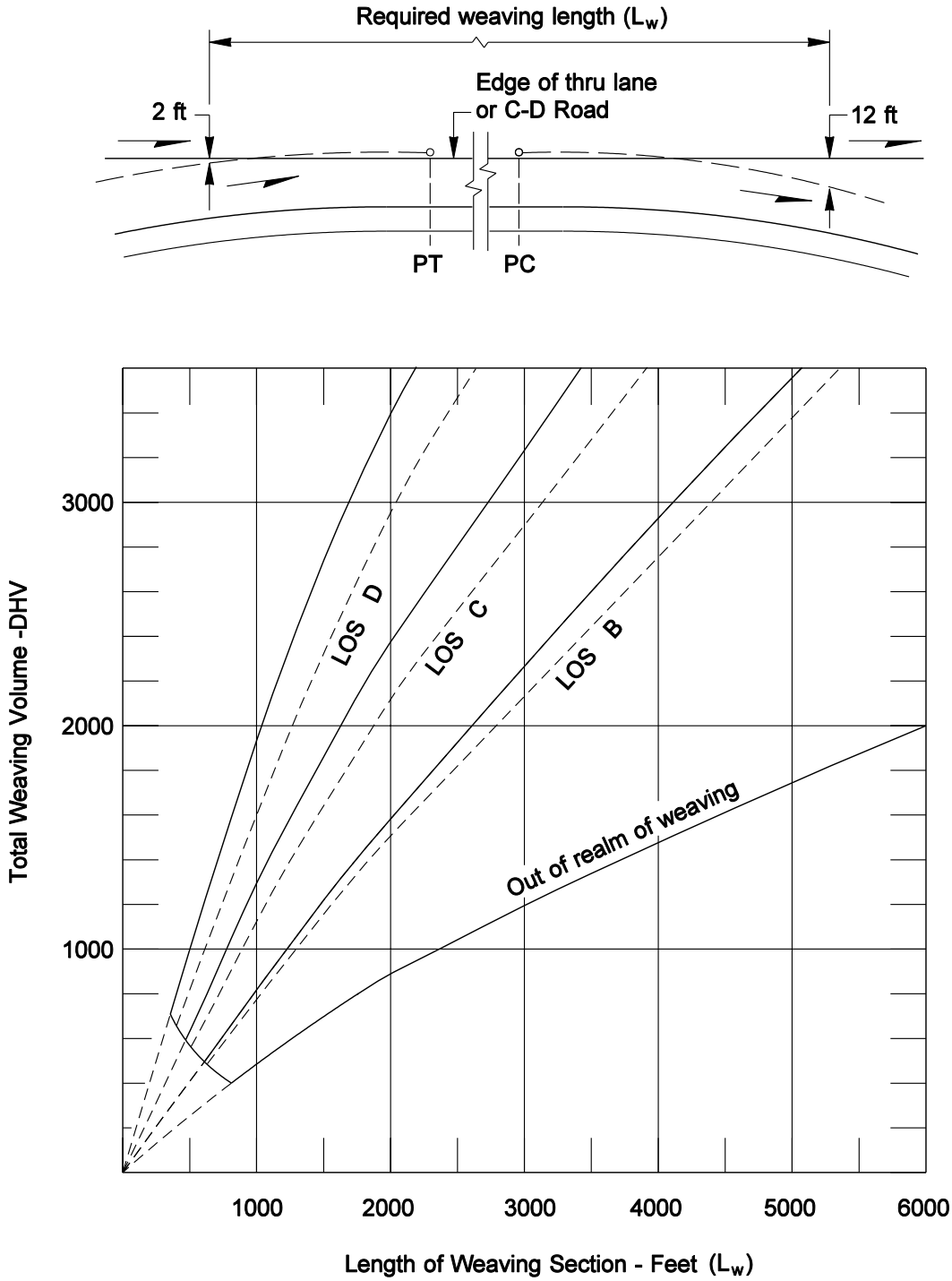

See Figure 940-7 to determine
whether or not lane balance exists

Length of Weaving Sections
Figure 940-15

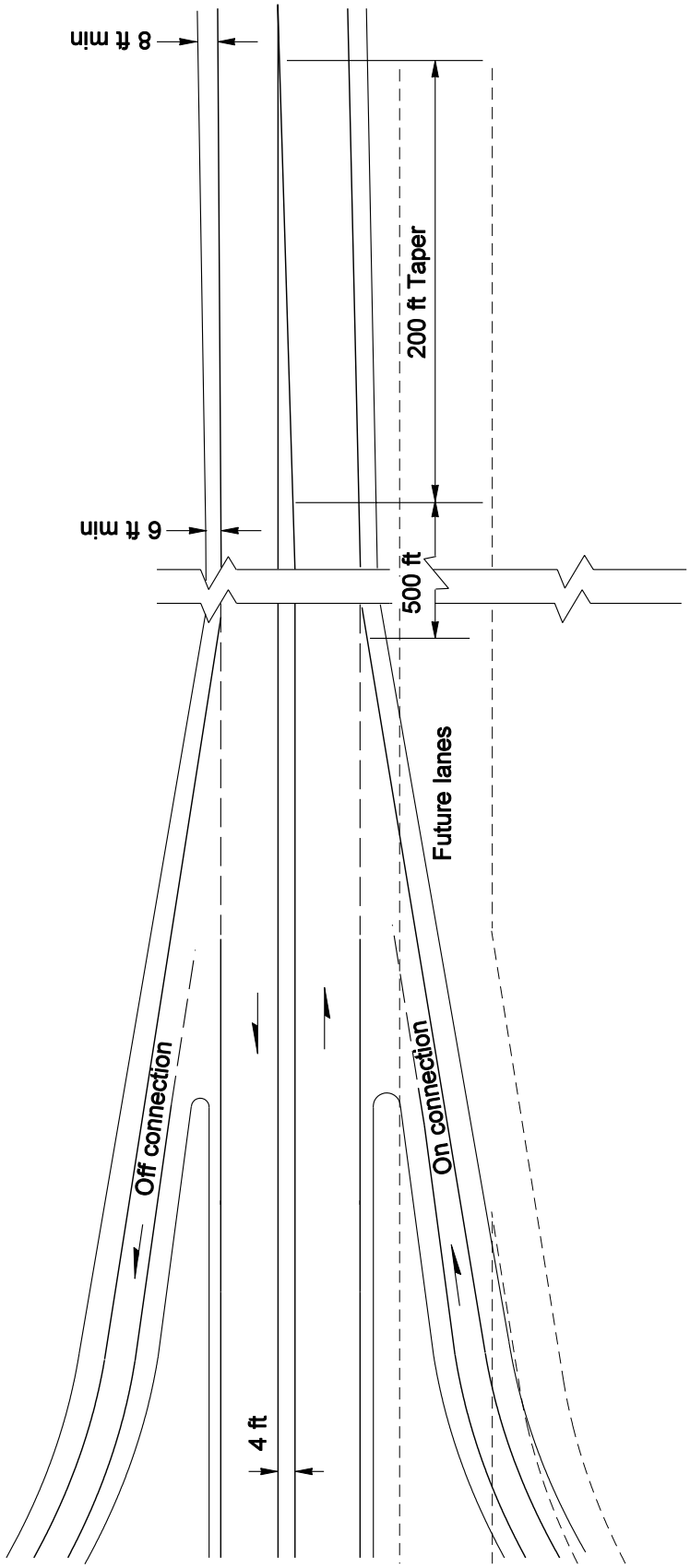

Temporary Ramps
Figure 940-16

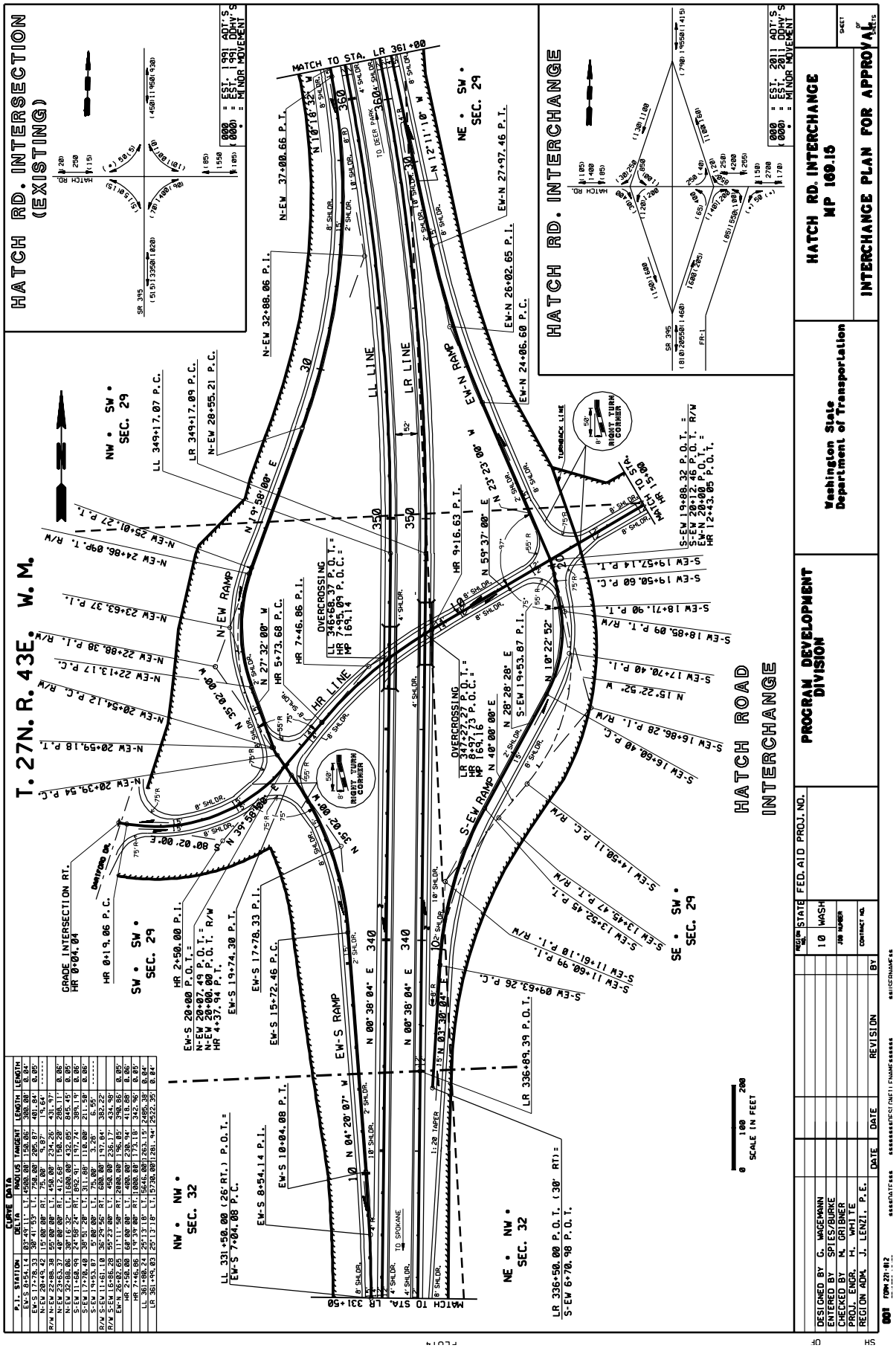

Interchange Plan
Figure 940-17